2013 VULCAN® 900 CLASSIC LT

PARTS DIAGRAM

Cables

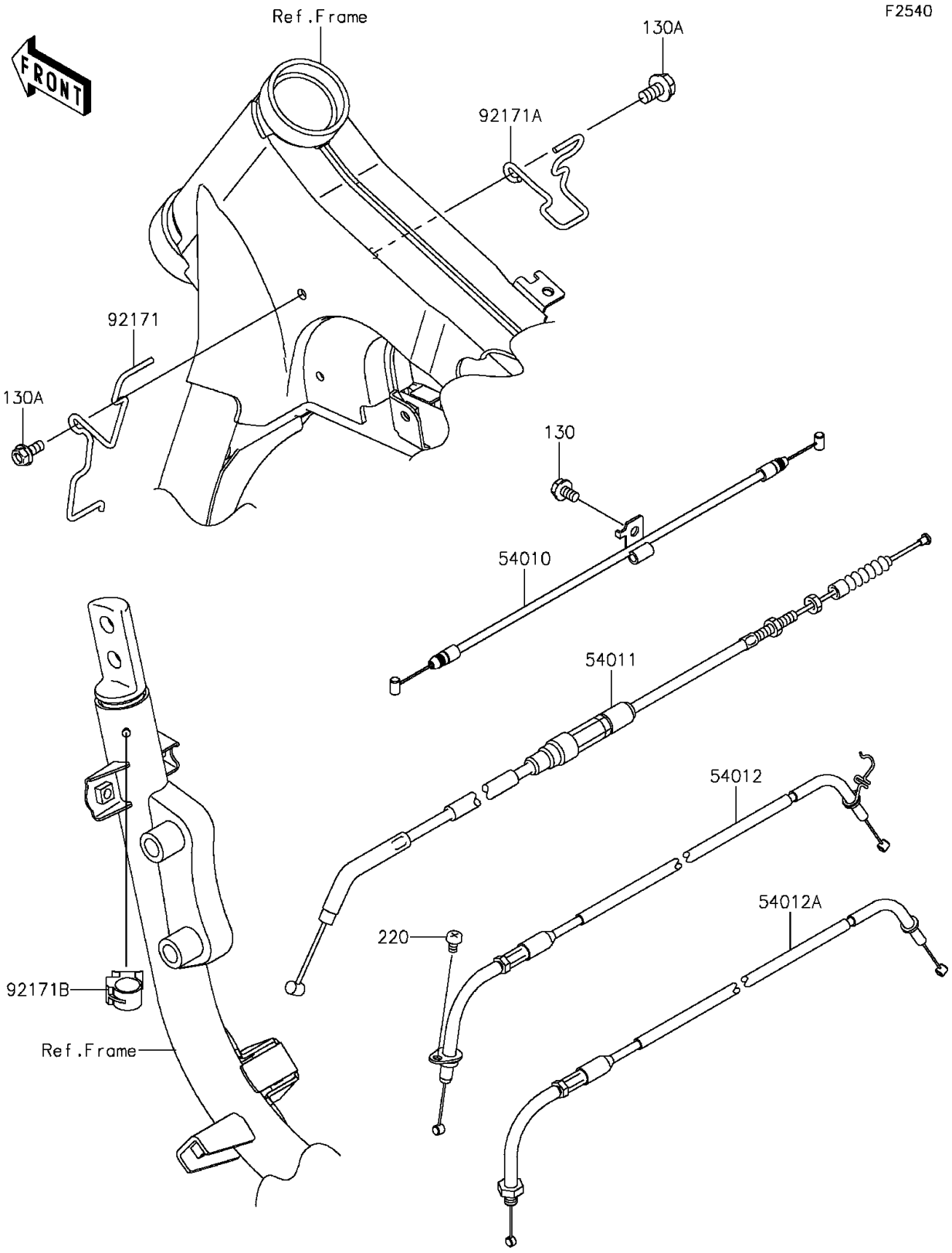

© 2026 Kawasaki Motors Corp., U.S.A.

2013 VULCAN® 900 CLASSIC LT

PARTS LIST

Cables

ITEM NAME	PART NUMBER	QUANTITY
BOLT-FLANGED,6X10 (Ref # 130)	130BB0610	1
BOLT-FLANGED,6X14 (Ref # 130A)	130BB0614	2
SCREW-PAN-CROS,5X8 (Ref # 220)	220AB0508	1
CABLE,SEAT LOCK (Ref # 54010)	54010-0065	1
CABLE-CLUTCH (Ref # 54011)	54011-0070	1
CABLE-THROTTLE,OPENING (Ref # 54012)	54012-0171	1
CABLE-THROTTLE,CLOSING (Ref # 54012A)	54012-0172	1
CLAMP,FR,LH (Ref # 92171)	92171-0597	1
CLAMP,FR,RH (Ref # 92171A)	92171-0605	1
CLAMP,DIA=15 (Ref # 92171B)	92171-1424	1

© 2026 Kawasaki Motors Corp., U.S.A.