2013 VULCAN® 900 CLASSIC LT

PARTS DIAGRAM

Frame Fittings

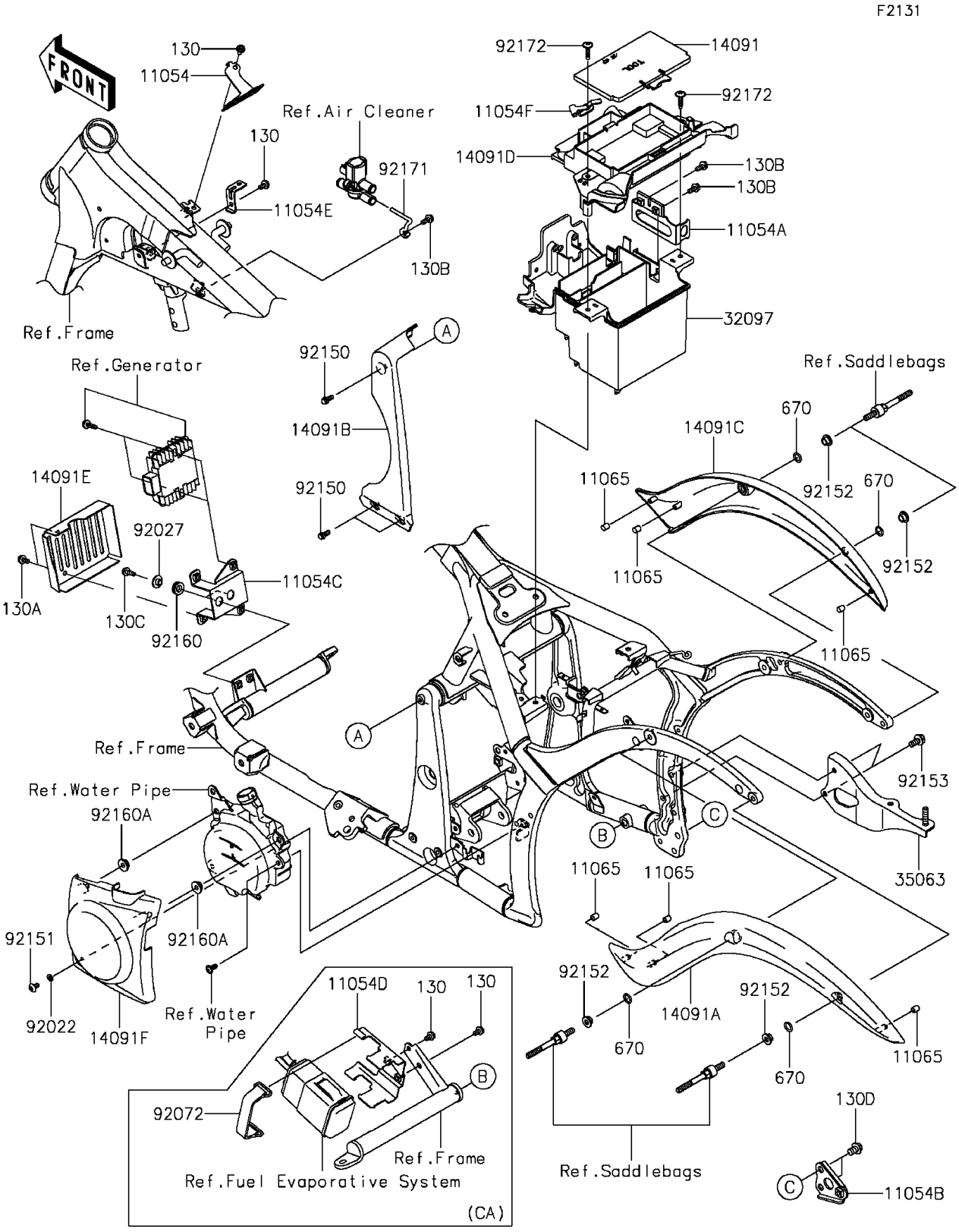

© 2026 Kawasaki Motors Corp., U.S.A.

2013 VULCAN® 900 CLASSIC LT

PARTS LIST

Frame Fittings

ITEM NAME	PART NUMBER	QUANTITY
BOLT-FLANGED,6X12 (Ref # 130A)	130BB0612	2
BOLT-FLANGED,6X14 (Ref # 130B)	130BB0614	3
BOLT-FLANGED,6X20 (Ref # 130C)	130BB0620	2
BOLT-FLANGED,10X14 (Ref # 130D)	130BB1014	2
O RING,12MM (Ref # 670)	670B2012	4
BRACKET,FRONT COUPLER (Ref # 11054)	11054-0119	1
BRACKET,RELAY BOX (Ref # 11054A)	11054-0120	1
BRACKET,MUFFLER (Ref # 11054B)	11054-0122	1
BRACKET,REGULATOR (Ref # 11054C)	11054-0124	1
BRACKET,BOOST SENSOR (Ref # 11054E)	11054-0736	1
BRACKET,HELMET LOCK (Ref # 11054F)	11054-0738	1
CAP (Ref # 11065)	11065-0156	6
COVER,TOOL CASE (Ref # 14091)	14091-0520	1
COVER,FENDER,LH (Ref # 14091A)	14091-0521	1
COVER,PIVOT (Ref # 14091B)	14091-0526	1
COVER,FENDER,RH (Ref # 14091C)	14091-0638	1
COVER,BATTERY CASE&TOOL CASE (Ref # 14091D)	14091-0733	1
COVER,REGULATOR (Ref # 14091E)	14091-0836	1
COVER,RESERVOIR TANK (Ref # 14091F)	14091-1628	1
CASE-BATTERY (Ref # 32097)	32097-0021	1
STAY,MUFFLER,F.S.BLACK (Ref # 35063)	35063-0342-18R	1
WASHER,6.2X11X1.5 (Ref # 92022)	92022-183	1
COLLAR,L=7.4 (Ref # 92027)	92027-1848	2
BOLT,FLANGED,6X14 (Ref # 92150)	92150-1689	3
BOLT,SOCKET,6X12 (Ref # 92151)	92151-1940	1
COLLAR (Ref # 92152)	92152-0381	4
BOLT,FLANGED,8X20 (Ref # 92153)	92153-1704	2
DAMPER (Ref # 92160)	92160-1278	2
DAMPER (Ref # 92160A)	92160-1613	2

© 2026 Kawasaki Motors Corp., U.S.A.

2013 VULCAN® 900 CLASSIC LT

PARTS LIST

Frame Fittings

ITEM NAME	PART NUMBER	QUANTITY
CLAMP (Ref # 92171)	92171-0600	1
SCREW,6X26 (Ref # 92172)	92172-0137	2
BOLT-FLANGED,6X10 (Ref # 130)	130BB0610	2
BOLT-FLANGED,6X10 (Ref # 130)	130BB0610	4
BRACKET,CANISTER (Ref # 11054D)	11054-0147	1
BAND (Ref # 92072)	92072-1384	1

© 2026 Kawasaki Motors Corp., U.S.A.