2013 VULCAN® 900 CLASSIC LT

PARTS DIAGRAM

Generator

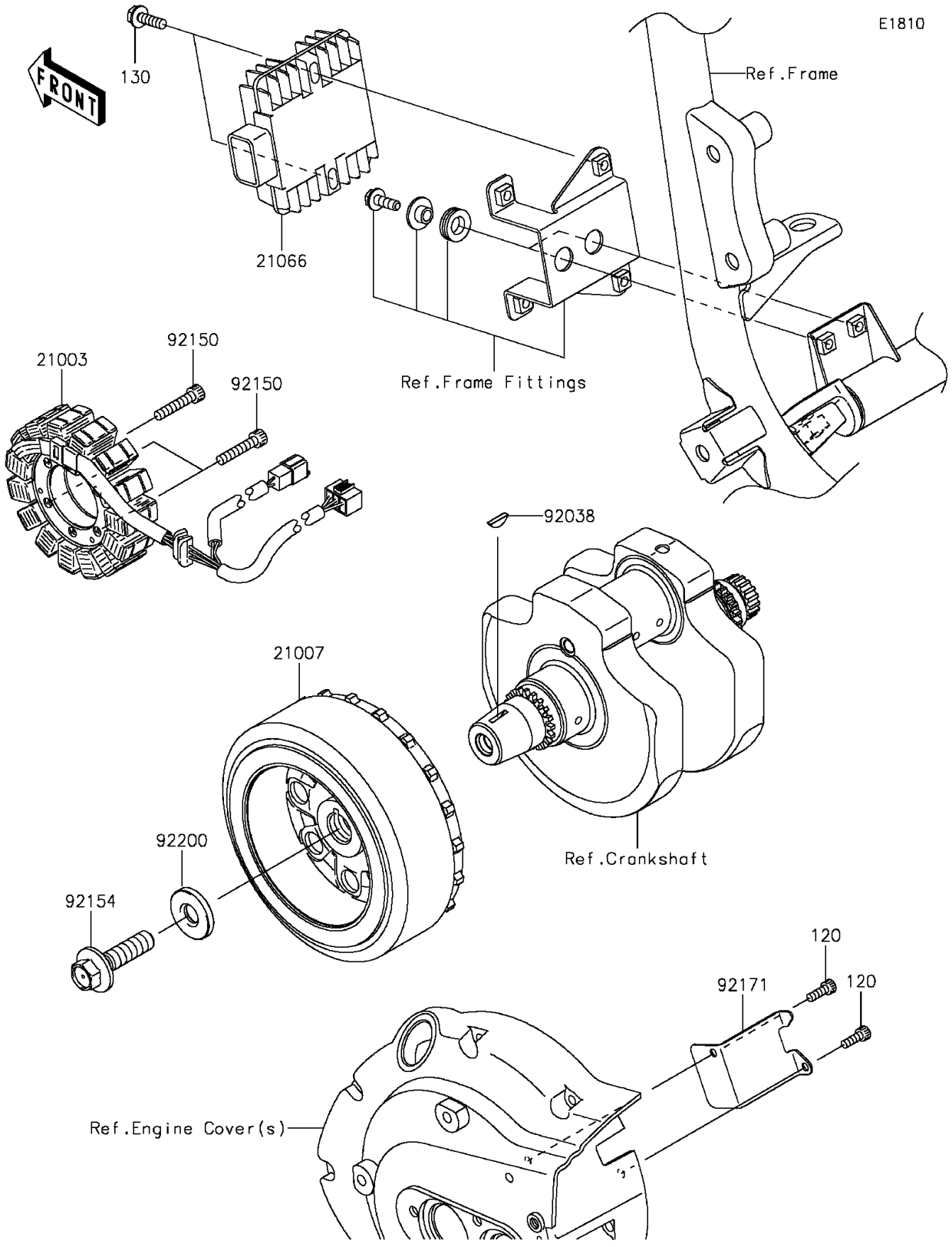

© 2026 Kawasaki Motors Corp., U.S.A.

2013 VULCAN® 900 CLASSIC LT

PARTS LIST

Generator

ITEM NAME	PART NUMBER	QUANTITY
BOLT-SOCKET,5X14 (Ref # 120)	120CA0514	2
BOLT-FLANGED,6X20 (Ref # 130)	130BB0620	2
STATOR (Ref # 21003)	21003-0053	1
ROTOR (Ref # 21007)	21007-0076	1
REGULATOR-VOLTAGE (Ref # 21066)	21066-0705	1
KEY,WOODRUFF (Ref # 92038)	92038-001	1
BOLT,SOCKET,6X30 (Ref # 92150)	92150-1433	3
BOLT,FLANGED,12X45 (Ref # 92154)	92154-1357	1
CLAMP (Ref # 92171)	92171-0563	1
WASHER,12X33X5 (Ref # 92200)	92200-0220	1

© 2026 Kawasaki Motors Corp., U.S.A.