2013 VULCAN® 900 CLASSIC LT

PARTS DIAGRAM

Fuel Injection

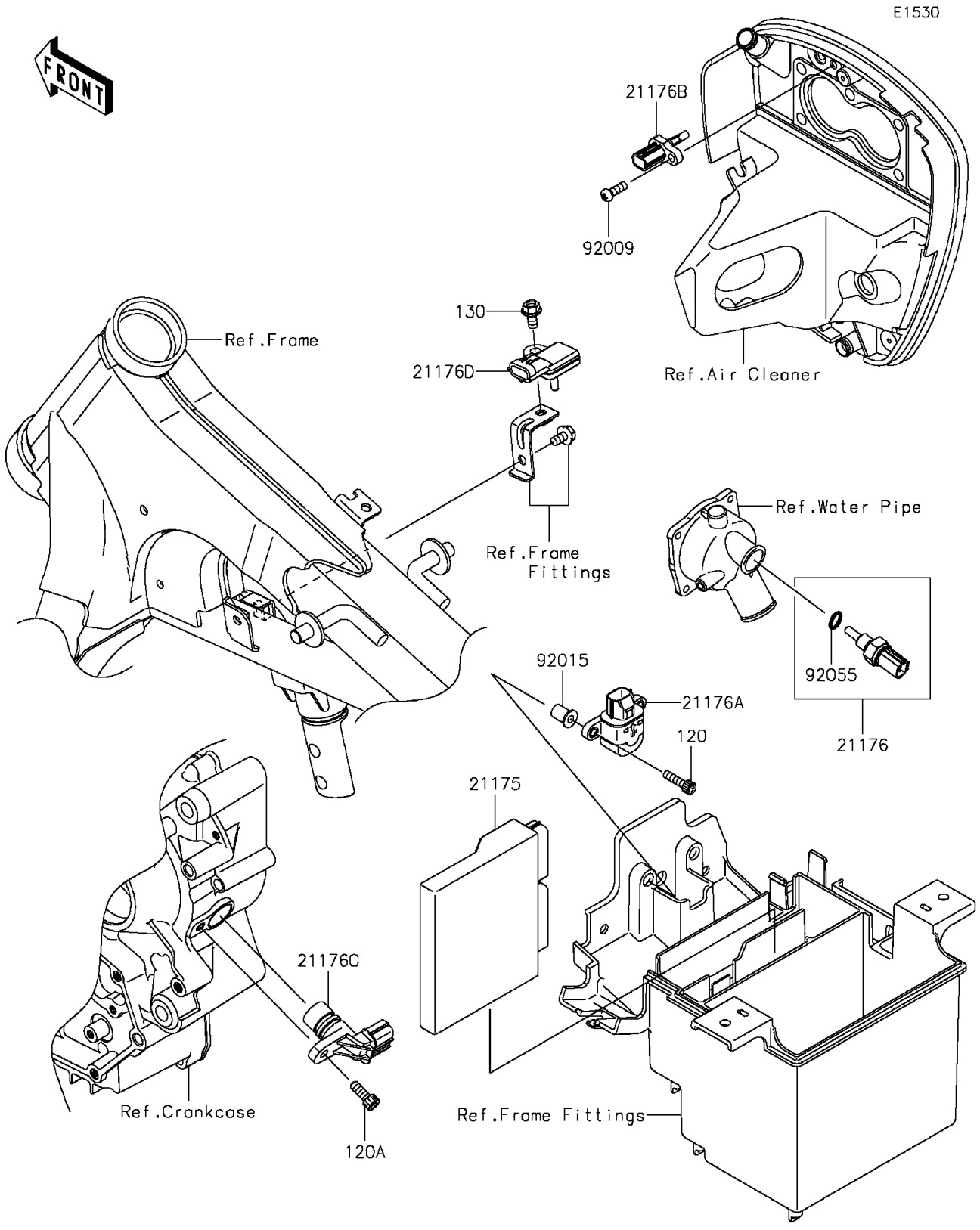

© 2026 Kawasaki Motors Corp., U.S.A.

2013 VULCAN® 900 CLASSIC LT

PARTS LIST

Fuel Injection

ITEM NAME	PART NUMBER	QUANTITY
BOLT-SOCKET,5X20 (Ref # 120)	120CA0520	2
BOLT-SOCKET,6X16 (Ref # 120A)	120CA0616	1
BOLT-FLANGED,6X12 (Ref # 130)	130BA0612	1
CONTROL UNIT-ELECTRONIC (Ref # 21175)	21175-0146	1
SENSOR,WATER TEMP (Ref # 21176)	21176-0009	1
SENSOR (Ref # 21176A)	21176-0025	1
SENSOR,AIR TEMPERATURE (Ref # 21176B)	21176-0048	1
SENSOR,SPEED (Ref # 21176C)	21176-0054	1
SENSOR,PRESSURE (Ref # 21176D)	21176-0058	1
SCREW,TAPPING,5X16 (Ref # 92009)	92009-1984	1
NUT,WELL,5MM (Ref # 92015)	92015-1757	2
RING-O,9.5X1.9 (Ref # 92055)	92055-0016	1

© 2026 Kawasaki Motors Corp., U.S.A.