2013 VULCAN® 900 CLASSIC

PARTS DIAGRAM

Front Wheel

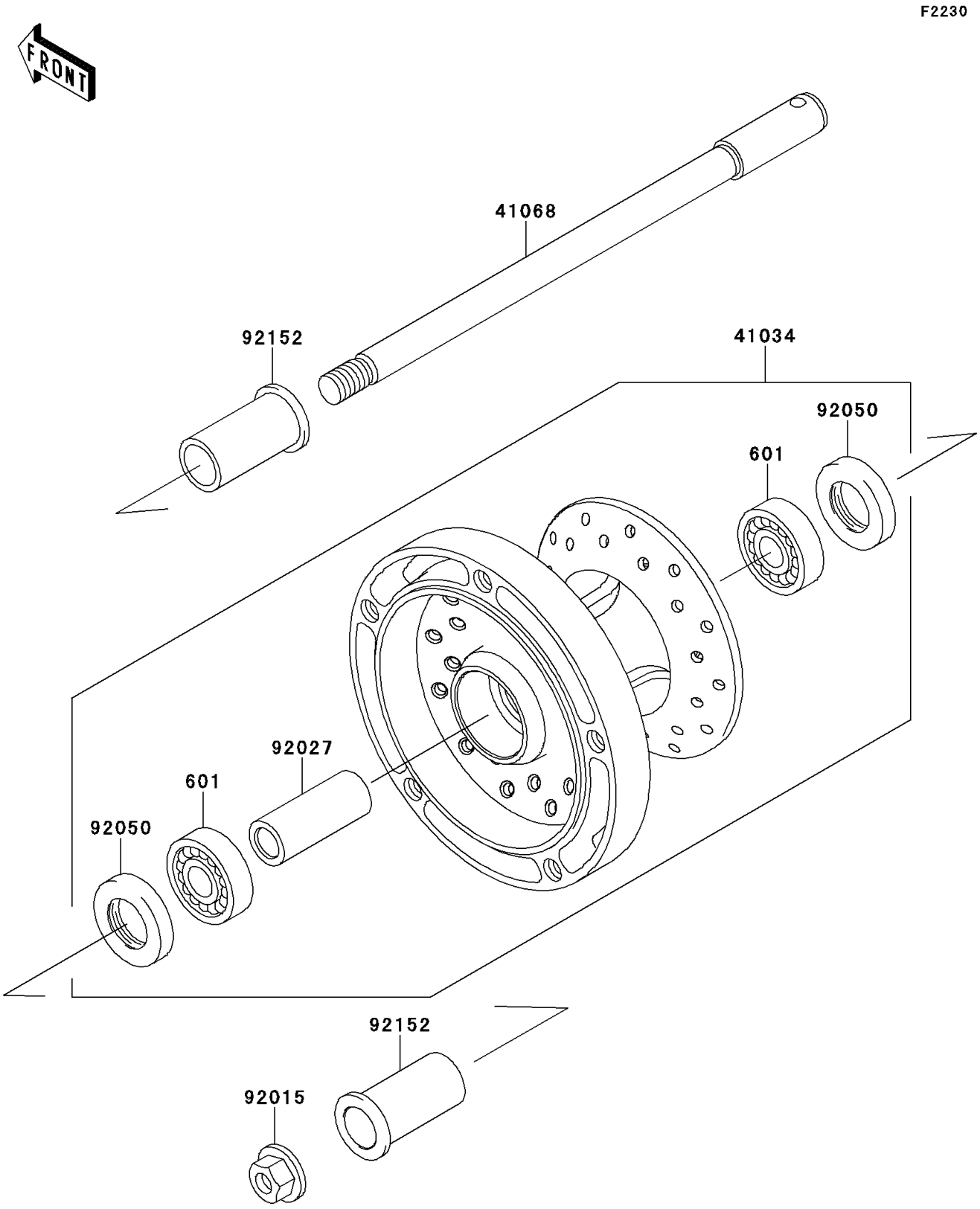

© 2026 Kawasaki Motors Corp., U.S.A.

2013 VULCAN® 900 CLASSIC

PARTS LIST

Front Wheel

ITEM NAME	PART NUMBER	QUANTITY
BEARING-BALL,#6004UG (Ref # 601)	601B6004UG	2
DRUM-ASSY,FRONT BRAKE (Ref # 41034)	41034-0029	1
AXLE,FR (Ref # 41068)	41068-0058	1
NUT,FLANGED,18MM (Ref # 92015)	92015-1993	1
COLLAR,20.2X28X70 (Ref # 92027)	92027-1752	1
SEAL-OIL,RR HUB COUPLING (Ref # 92050)	92050-060	2
COLLAR,FR AXLE,L=53 (Ref # 92152)	92152-0349	2

© 2026 Kawasaki Motors Corp., U.S.A.