2007 Vulcan 900 Custom

PARTS DIAGRAM

Radiator

E3032

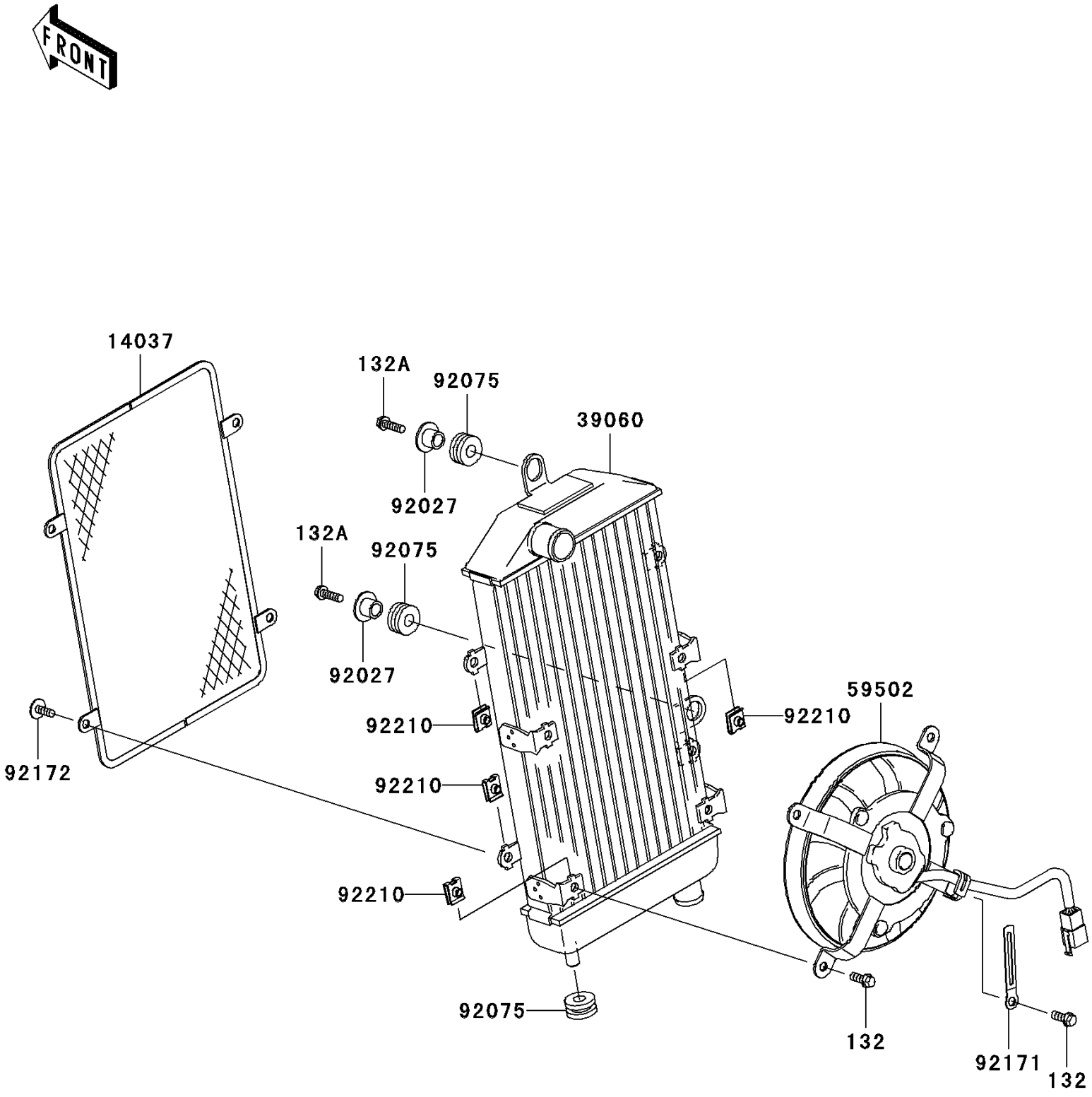

© 2026 Kawasaki Motors Corp., U.S.A.

2007 Vulcan 900 Custom

PARTS LIST

Radiator

ITEM NAME	PART NUMBER	QUANTITY
BOLT-FLANGED-SMALL,6X14 (Ref # 132)	132BB0614	4
BOLT-FLANGED-SMALL,6X20 (Ref # 132A)	132BB0620	2
SCREEN (Ref # 14037)	14037-0046	1
RADIATOR (Ref # 39060)	39060-0029	1
FAN-ASSY (Ref # 59502)	59502-0023	1
COLLAR,L=13.1,BLACK (Ref # 92027)	92027-1450	2
DAMPER (Ref # 92075)	92075-1690	3
CLAMP (Ref # 92171)	92171-0791	1
SCREW,6X14 (Ref # 92172)	92172-0004	4
NUT (Ref # 92210)	92210-1323	8

© 2026 Kawasaki Motors Corp., U.S.A.