2010 Vulcan® 900 Classic

PARTS DIAGRAM

Cylinder Head

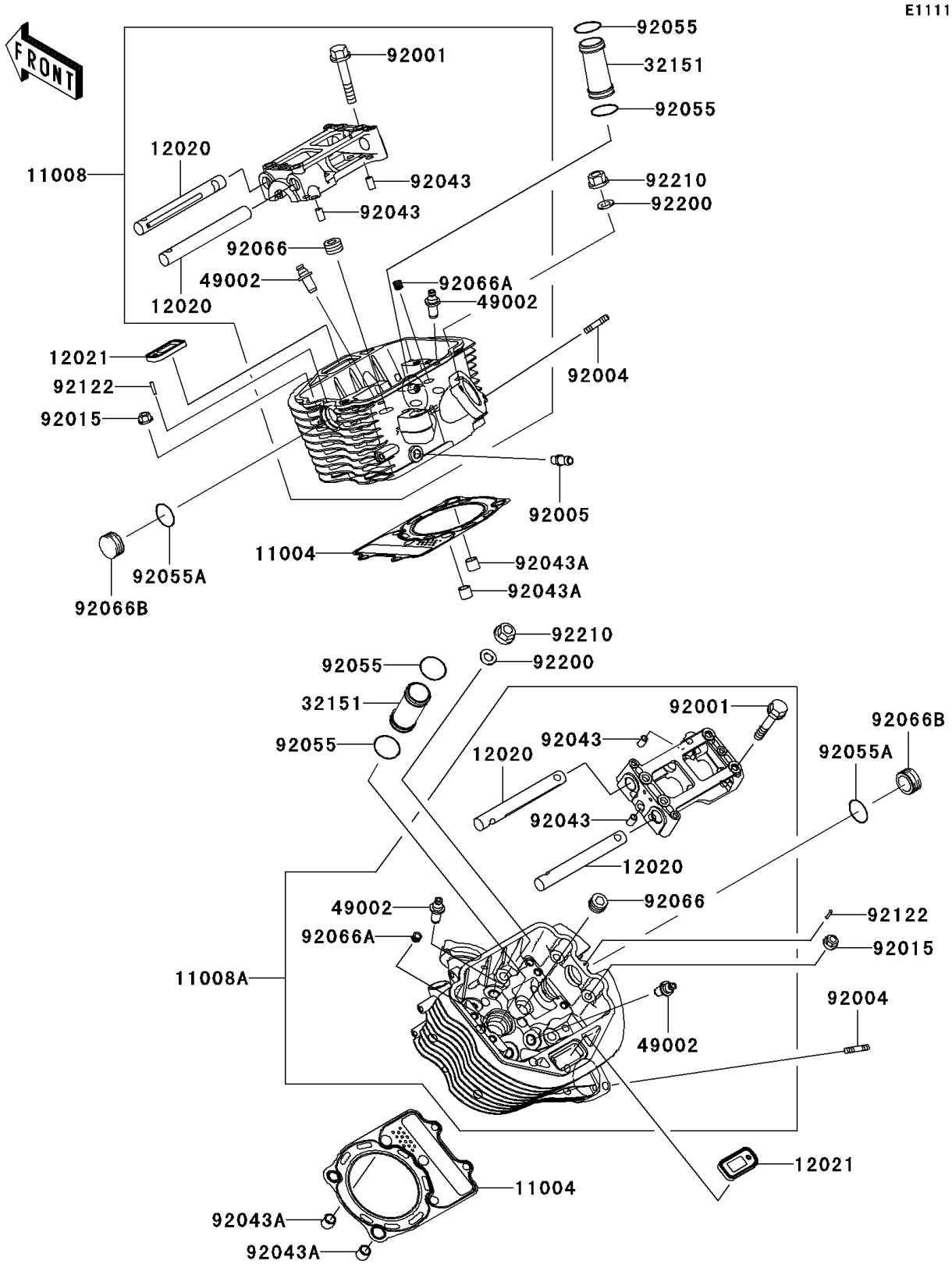

© 2026 Kawasaki Motors Corp., U.S.A.

2010 Vulcan® 900 Classic

PARTS LIST

Cylinder Head

ITEM NAME	PART NUMBER	QUANTITY
GASKET-HEAD (Ref # 11004)	11004-0062	2
HEAD-COMP-CYLINDER,FR (Ref # 11008)	11008-0102	1
HEAD-COMP-CYLINDER,RR (Ref # 11008A)	11008-0103	1
SHAFT-ROCKER (Ref # 12020)	12020-1070	4
VALVE-ASSY-REED (Ref # 12021)	12021-0017	2
PIPE,PLUG (Ref # 32151)	32151-1893	2
GUIDE-VALVE (Ref # 49002)	49002-1089	AR
BOLT,FLANGED,8X58 (Ref # 92001)	92001-1005	8
STUD,8X22 (Ref # 92004)	92004-1217	4
FITTING,BREATHER PIPE (Ref # 92005)	92005-1161	1
NUT,FLANGED,8MM (Ref # 92015)	92015-1406	4
PIN,6.2X8X14 (Ref # 92043)	92043-1263	4
PIN,11X14X12.3 (Ref # 92043A)	92043-1266	4
RING-O,27.7X1.9 (Ref # 92055)	92055-0096	4
RING-O,24.5X2.0 (Ref # 92055A)	92055-0097	2
PLUG,PT1/2X12.5 (Ref # 92066)	92066-0002	2
PLUG,PT1/4X8.9 (Ref # 92066A)	92066-1260	2
PLUG,CAM HOLE (Ref # 92066B)	92066-1462	2
ROLLER,3X15.8 (Ref # 92122)	92122-1126	2
WASHER,10.5X20.5X1.6 (Ref # 92200)	92200-0313	8
NUT,FLANGED,M10X1.25 (Ref # 92210)	92210-0269	8

© 2026 Kawasaki Motors Corp., U.S.A.