2010 Super Sherpa (Canada Only)

PARTS DIAGRAM

Front Brake

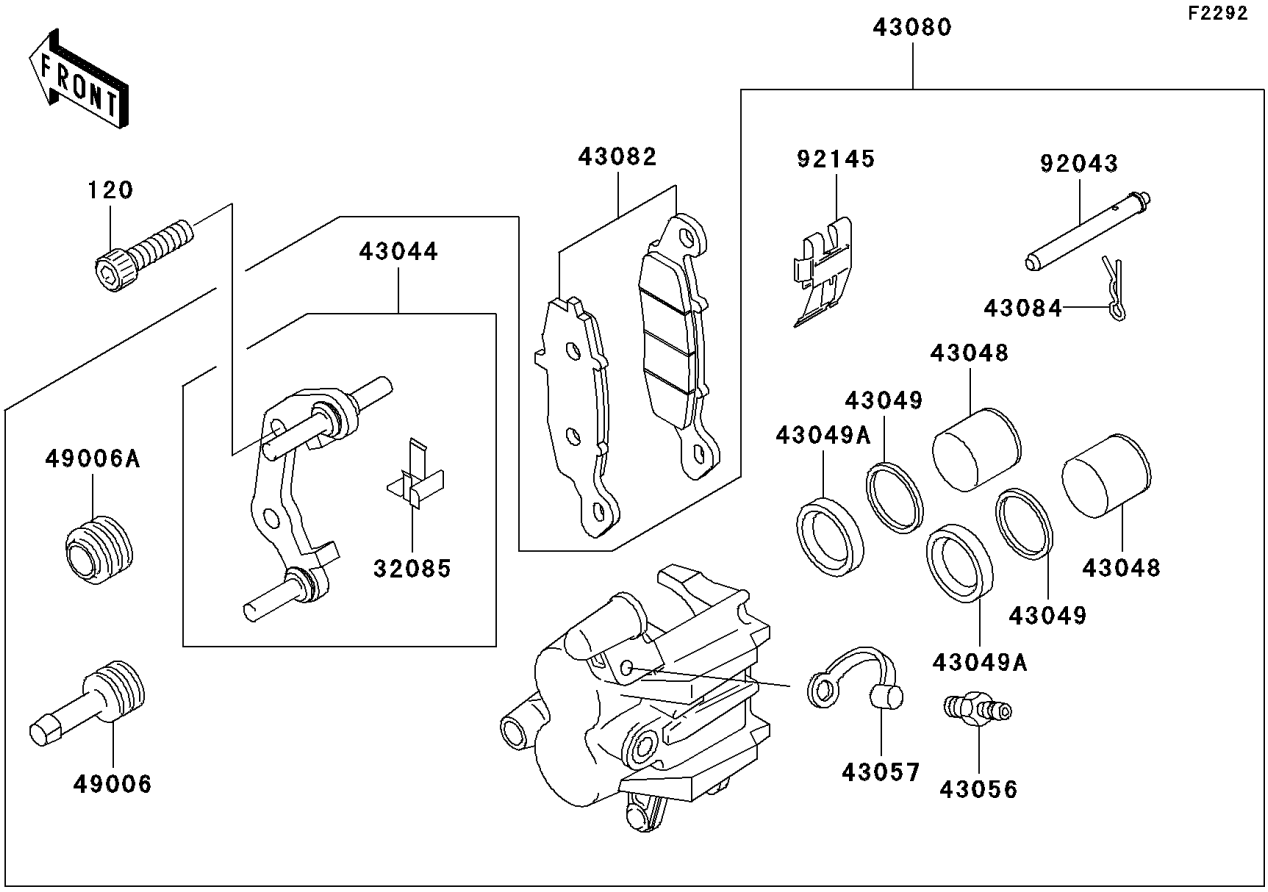

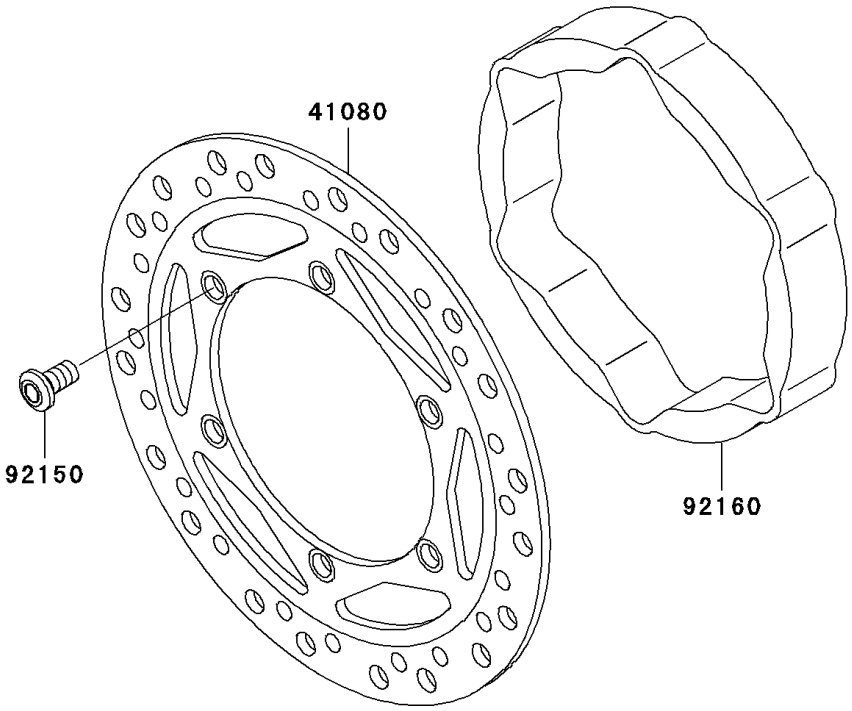

© 2026 Kawasaki Motors Corp., U.S.A.

2010 Super Sherpa (Canada Only)

PARTS LIST

Front Brake

ITEM NAME	PART NUMBER	QUANTITY

© 2026 Kawasaki Motors Corp., U.S.A.