2025 Ninja ZX-6R

PARTS DIAGRAM

Brake Pedal/Torque Link

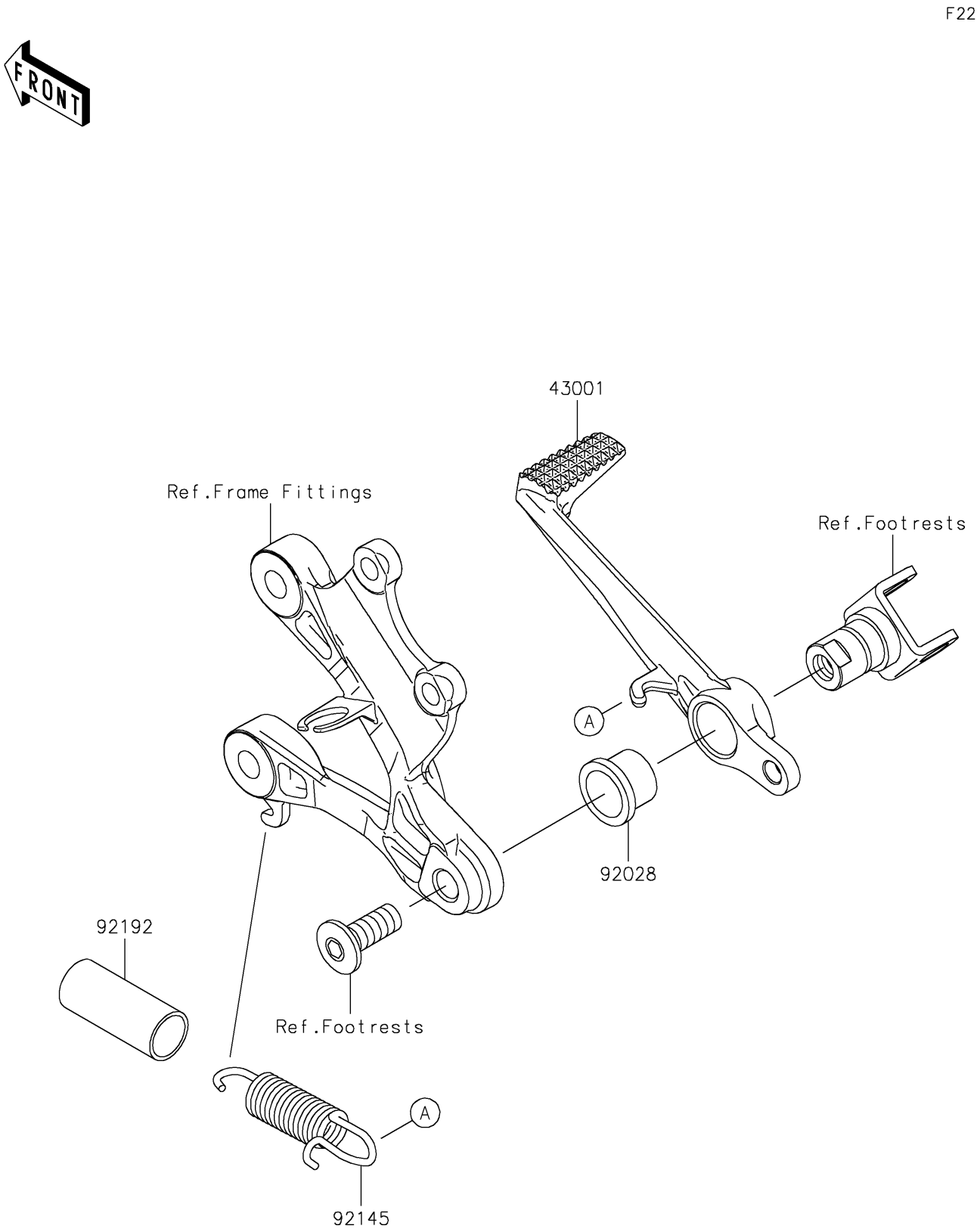

© 2026 Kawasaki Motors Corp., U.S.A.

2025 Ninja ZX-6R

PARTS LIST

Brake Pedal/Torque Link

ITEM NAME	PART NUMBER	QUANTITY

© 2026 Kawasaki Motors Corp., U.S.A.