2027 Ninja ZX-6R ABS

PARTS DIAGRAM

Accessory(Helmet Lock)

F2910D

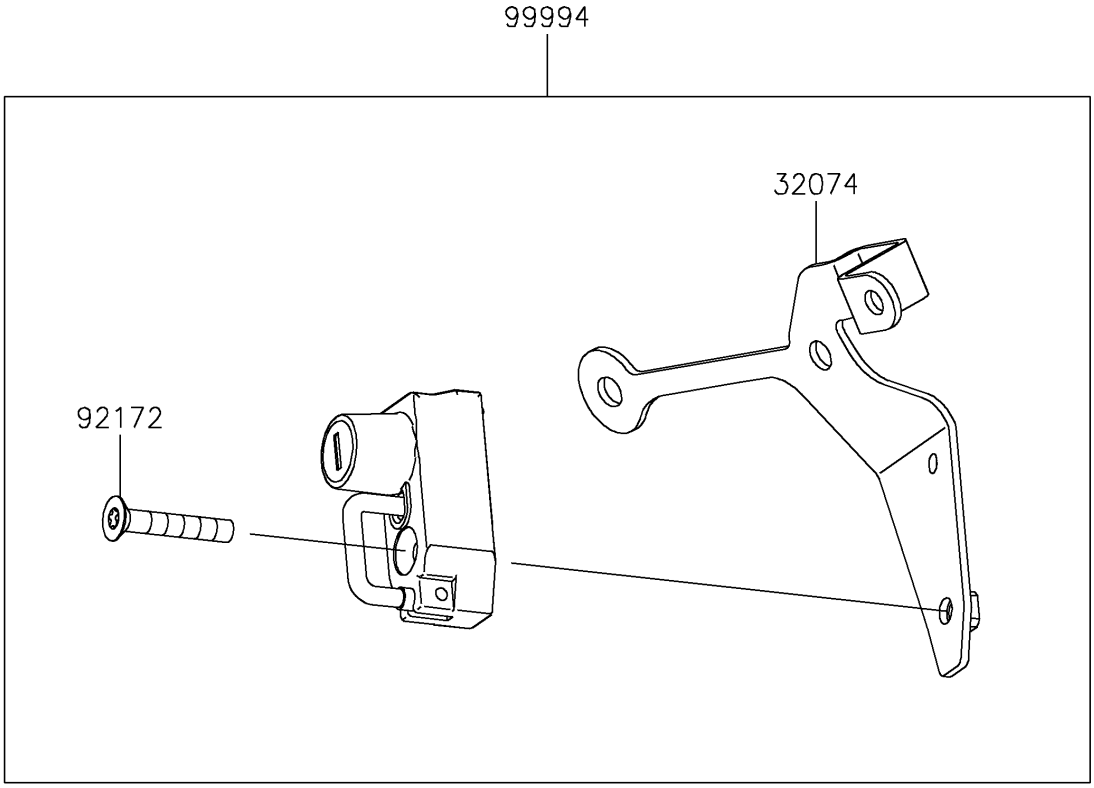

© 2026 Kawasaki Motors Corp., U.S.A.

2027 Ninja ZX-6R ABS

PARTS LIST

Accessory(Helmet Lock)

ITEM NAME	PART NUMBER	QUANTITY

© 2026 Kawasaki Motors Corp., U.S.A.