2026 KLX230 SHERPA S ABS

PARTS DIAGRAM

Owner's Tools

F2810

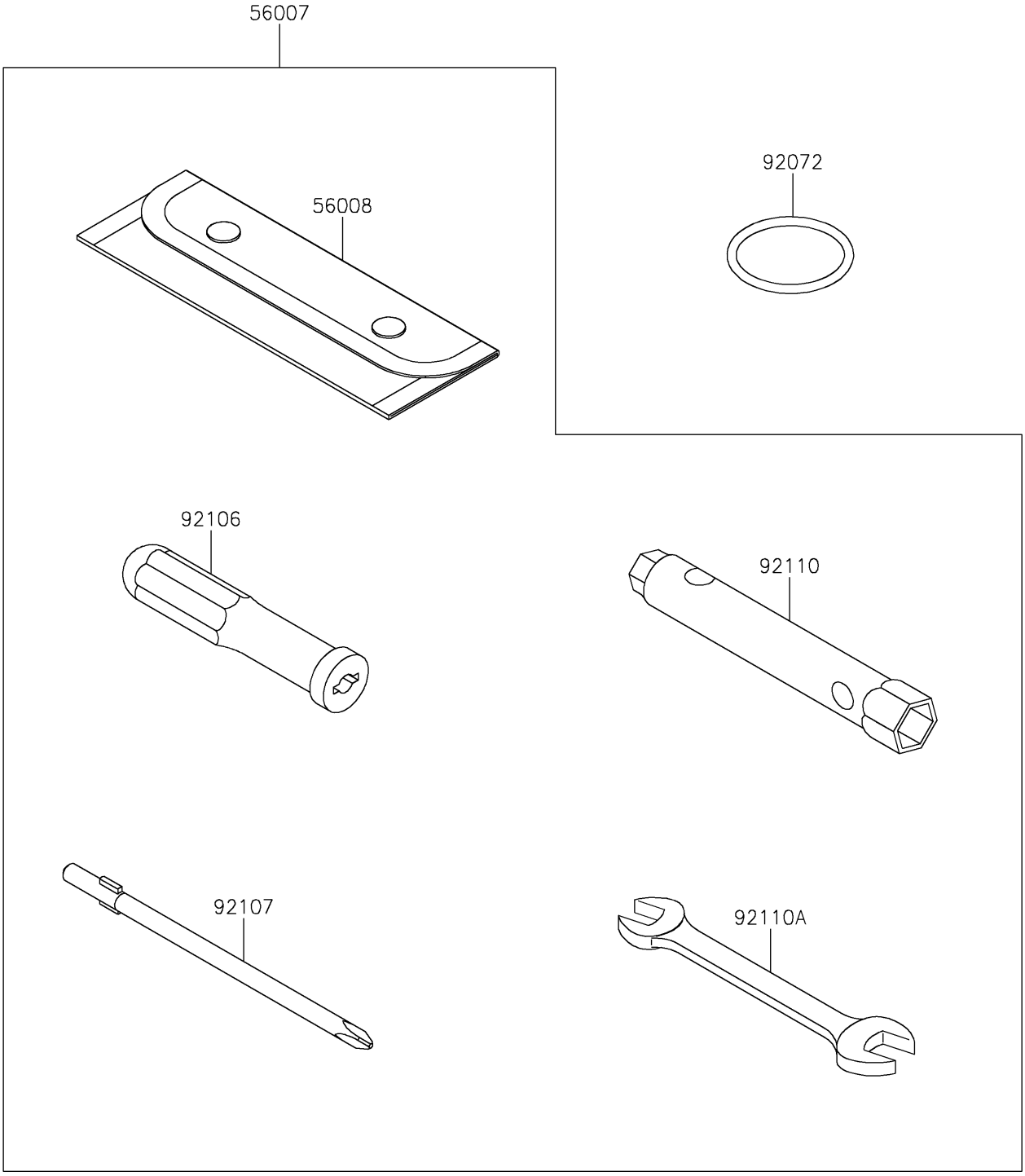

© 2026 Kawasaki Motors Corp., U.S.A.

2026 KLX230 SHERPA S ABS

PARTS LIST

Owner's Tools

ITEM NAME	PART NUMBER	QUANTITY
TOOL-KIT (Ref # 56007)	56007-0204	1
BAG (Ref # 56008)	56008-0591	1
BAND,TOOL CASE (Ref # 92072)	92072-0865	1
GRIP-SCREW DRIVER (Ref # 92106)	92106-0005	1
TOOL-DRIVER,#2PHILLIPS (Ref # 92107)	92107-0022	1
TOOL-WRENCH,BOX,8X10 (Ref # 92110)	92110-0584	1
TOOL-WRENCH,OPEN END,12X14 (Ref # 92110A)	92110-0586	1

© 2026 Kawasaki Motors Corp., U.S.A.