2026 KLX230 SHERPA S ABS

PARTS DIAGRAM

Front Hub

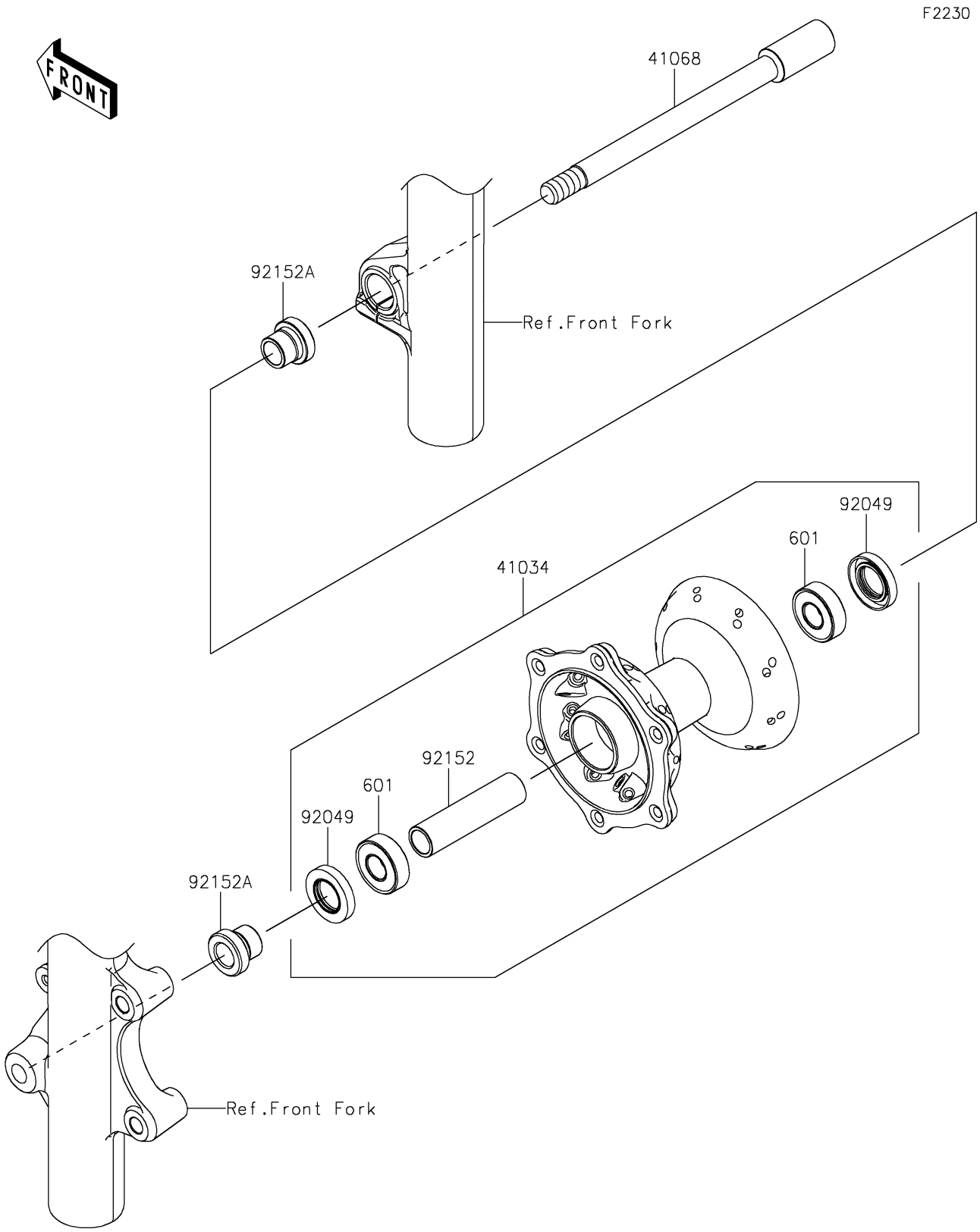

© 2026 Kawasaki Motors Corp., U.S.A.

2026 KLX230 SHERPA S ABS

PARTS LIST

Front Hub

ITEM NAME	PART NUMBER	QUANTITY
DRUM-ASSY,FR (Ref # 41034)	41034-0600	1
AXLE,FR,15X188 (Ref # 41068)	41068-0650	1
SEAL-OIL (Ref # 92049)	92049-0114	2
COLLAR,15.2X20X79 (Ref # 92152)	92152-2543	1
COLLAR (Ref # 92152A)	92152-2545	2
BEARING-BALL (Ref # 601)	601B6202UU	2

© 2026 Kawasaki Motors Corp., U.S.A.