2025 KLX230 S ABS

PARTS DIAGRAM

Taillight(s)

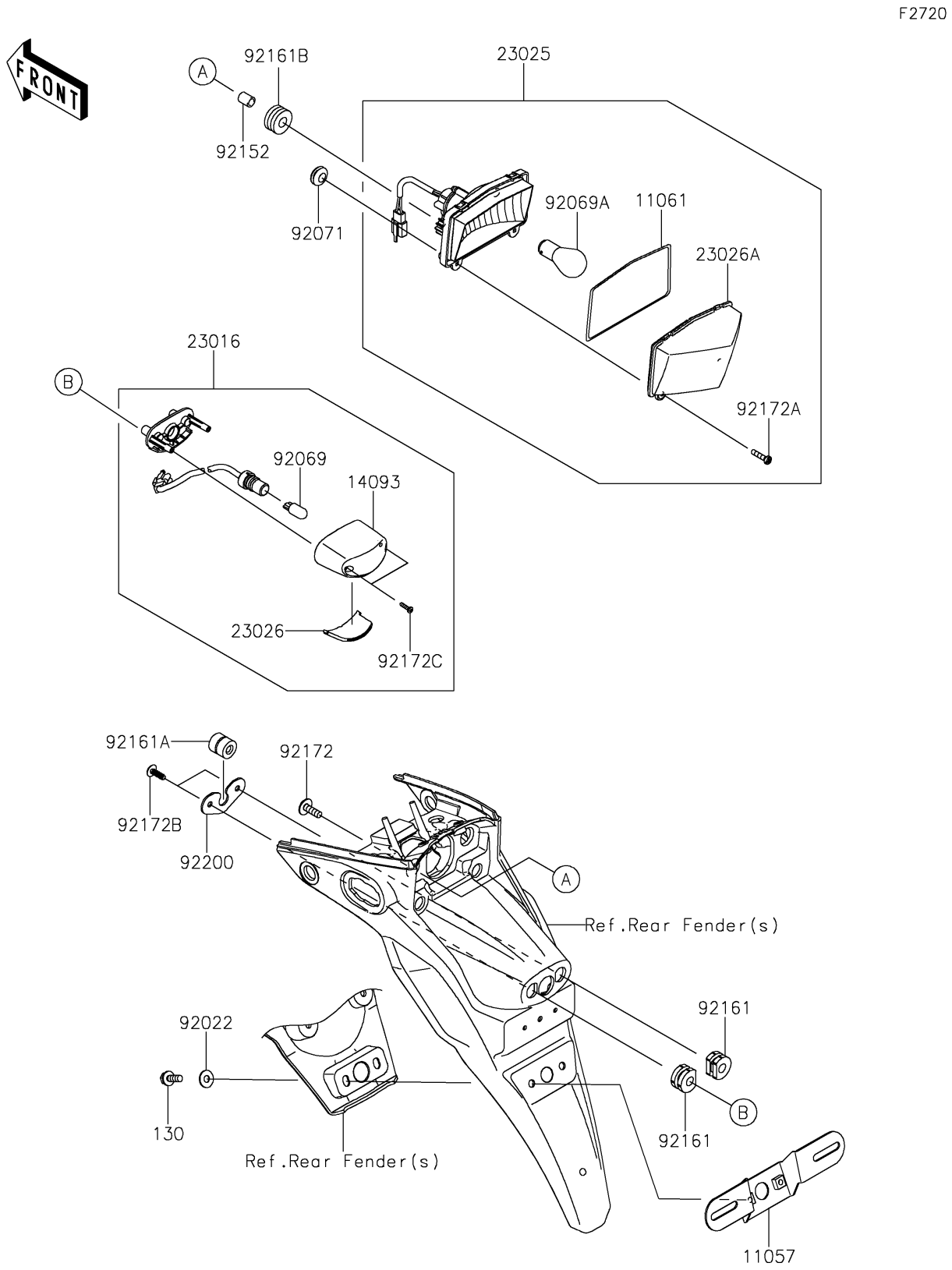

© 2026 Kawasaki Motors Corp., U.S.A.

2025 KLX230 S ABS

PARTS LIST

Taillight(s)

ITEM NAME	PART NUMBER	QUANTITY
BRACKET,LICENSE PLATE (Ref # 11057)	11057-1046	1
GASKET,TAIL LAMP LENS (Ref # 11061)	11061-0393	1
COVER,LICENSE LAMP (Ref # 14093)	14093-0525	1
LAMP-ASSY,LICENCE (Ref # 23016)	23016-0604	1
LAMP-TAIL (Ref # 23025)	23025-0392	1
LENS,LICENSE LAMP (Ref # 23026)	23026-0025	1
LENS,TAIL LAMP (Ref # 23026A)	23026-0036	1
WASHER,6.5X16X1.0 (Ref # 92022)	92022-1093	2
BULB,12V 5W (Ref # 92069)	92069-1016	1
BULB,12V 21/5W (Ref # 92069A)	92069-1084	1
GROMMET (Ref # 92071)	92071-024	2
COLLAR,6.8X10X13 (Ref # 92152)	92152-0580	2
DAMPER (Ref # 92161)	92161-0776	2
DAMPER,6X18X18.2 (Ref # 92161A)	92161-1809	1
DAMPER,10X24X12 (Ref # 92161B)	92161-2112	2
SCREW,6X18 (Ref # 92172)	92172-0192	2
SCREW,4.2X19 (Ref # 92172A)	92172-0411	2
SCREW,5X16 (Ref # 92172B)	92172-0834	2
SCREW,4X12 (Ref # 92172C)	92172-0904	2
WASHER (Ref # 92200)	92200-1773	1
BOLT-FLANGED,6X16 (Ref # 130)	130BA0616	2

© 2026 Kawasaki Motors Corp., U.S.A.