2025 KLX230 S ABS

PARTS DIAGRAM

Rear Hub

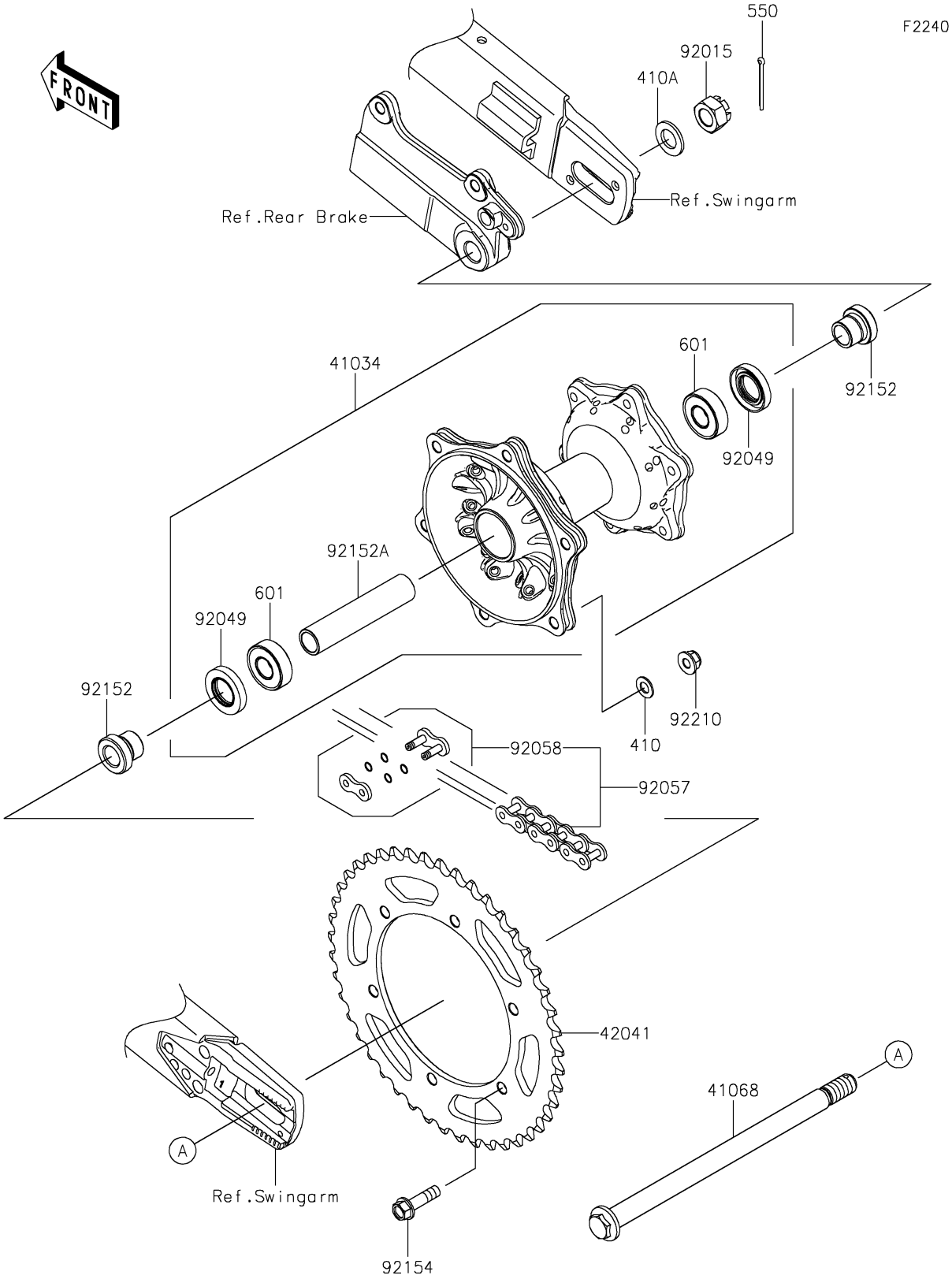

© 2026 Kawasaki Motors Corp., U.S.A.

2025 KLX230 S ABS

PARTS LIST

Rear Hub

ITEM NAME	PART NUMBER	QUANTITY
DRUM-ASSY,RR (Ref # 41034)	41034-0612	1
AXLE,RR,15X244 (Ref # 41068)	41068-0673	1
SPROCKET-HUB,45T (Ref # 42041)	42041-0174	1
NUT,CASTLE,14MM (Ref # 92015)	92015-1765	1
SEAL-OIL (Ref # 92049)	92049-0114	2
CHAIN,DRIVE,520VF2X108L (Ref # 92057)	92057-0802	1
JOINT-CHAIN (Ref # 92058)	92058-0069	1
COLLAR (Ref # 92152)	92152-2545	2
COLLAR,15.2X20X96.2 (Ref # 92152A)	92152-2546	1
BOLT,FLANGED,8X30 (Ref # 92154)	92154-3918	6
NUT,8MM (Ref # 92210)	92210-0570	6
WASHER-PLAIN-SMALL,8MM (Ref # 410)	410AA0800	6
WASHER-PLAIN-SMALL,14MM (Ref # 410A)	410AA1400	1
PIN-COTTER,3.0X35 (Ref # 550)	550AA3035	1
BEARING-BALL (Ref # 601)	601B6202UU	2

© 2026 Kawasaki Motors Corp., U.S.A.