2022 KLX®230 S

PARTS DIAGRAM

Owner's Tools

F2810

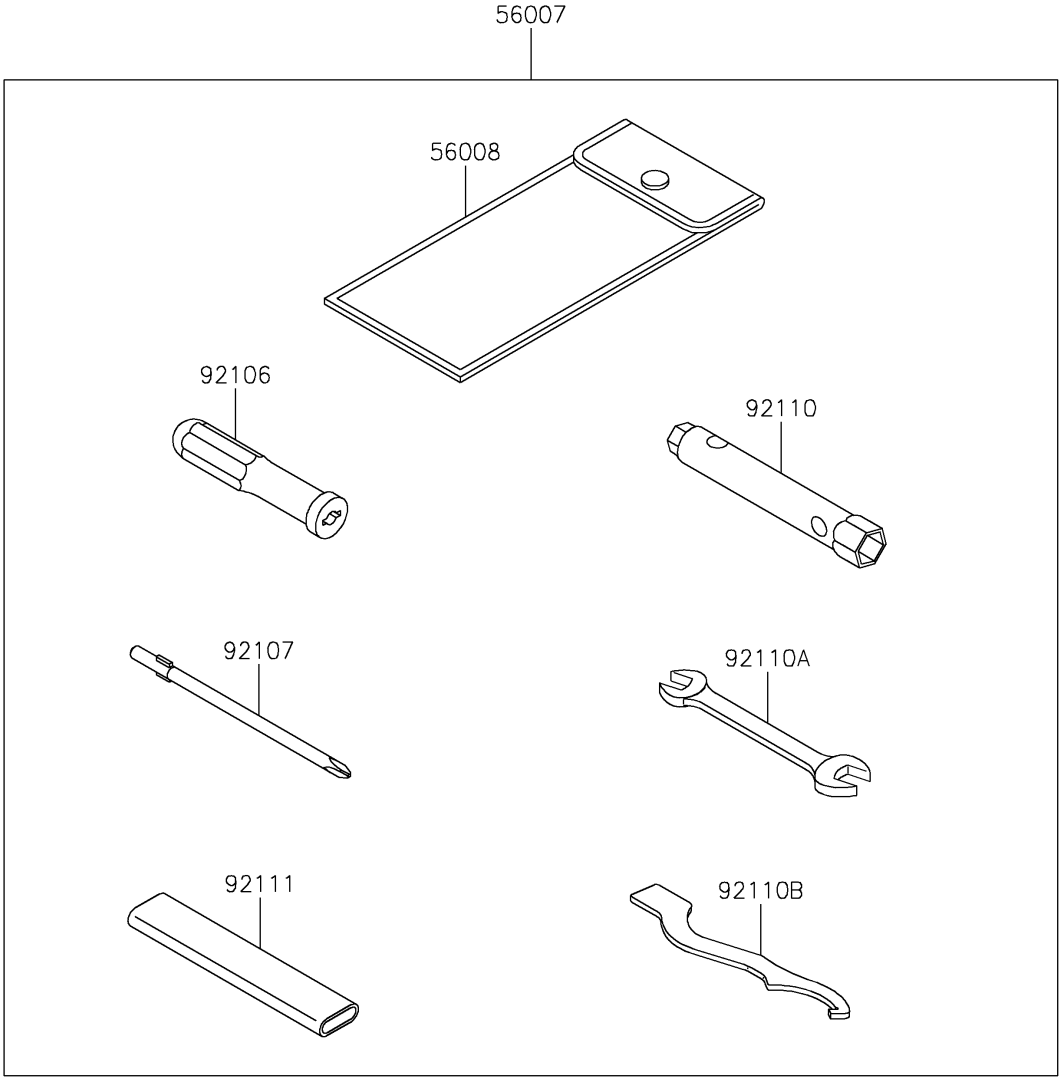

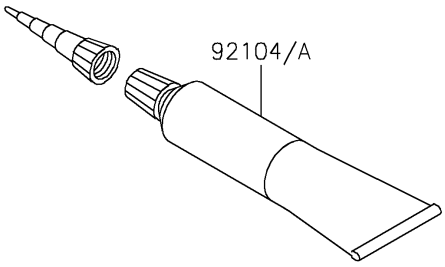

© 2026 Kawasaki Motors Corp., U.S.A.

2022 KLX®230 S

PARTS LIST

Owner's Tools

ITEM NAME	PART NUMBER	QUANTITY
TOOL-KIT (Ref # 56007)	56007-0190	1
BAG,TOOL (Ref # 56008)	56008-0050	1
GASKET-LIQUID,TB1211F,CLEAR (Ref # 92104)	92104-0004	1
GASKET-LIQUID,TB1216B,BLACK (Ref # 92104A)	92104-1064	1
GRIP-SCREW DRIVER (Ref # 92106)	92106-0005	1
TOOL-DRIVER,#2PHILLIPS (Ref # 92107)	92107-0022	1
TOOL-WRENCH,BOX,8X10 (Ref # 92110)	92110-0584	1
TOOL-WRENCH,OPEN END,12X14 (Ref # 92110A)	92110-0586	1
TOOL-WRENCH,SPRING ADJUST (Ref # 92110B)	92110-0624	1
TOOL-BAR (Ref # 92111)	92111-1057	1

© 2026 Kawasaki Motors Corp., U.S.A.