2020 KX™65

PARTS DIAGRAM

Shock Absorber(s)

Kawasaki
Let the Good Times Roll®

F2280

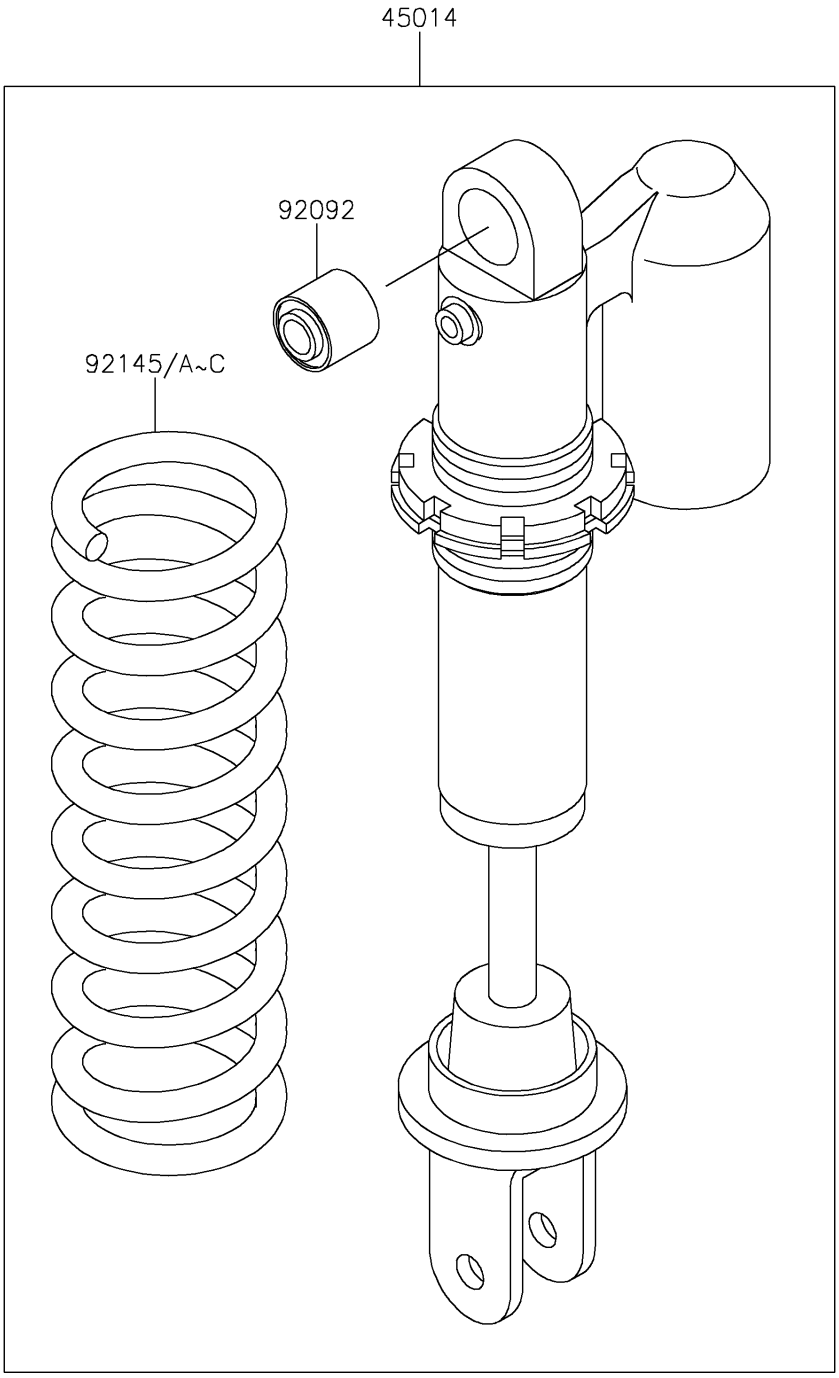

© 2026 Kawasaki Motors Corp., U.S.A.

2020 KX™65

PARTS LIST

Shock Absorber(s)

Kawasaki
Let the Good Times Roll®

ITEM NAME	PART NUMBER	QUANTITY

© 2026 Kawasaki Motors Corp., U.S.A.