2027 MULE™ 4010 TRANS4x4®

PARTS DIAGRAM

Crankcase

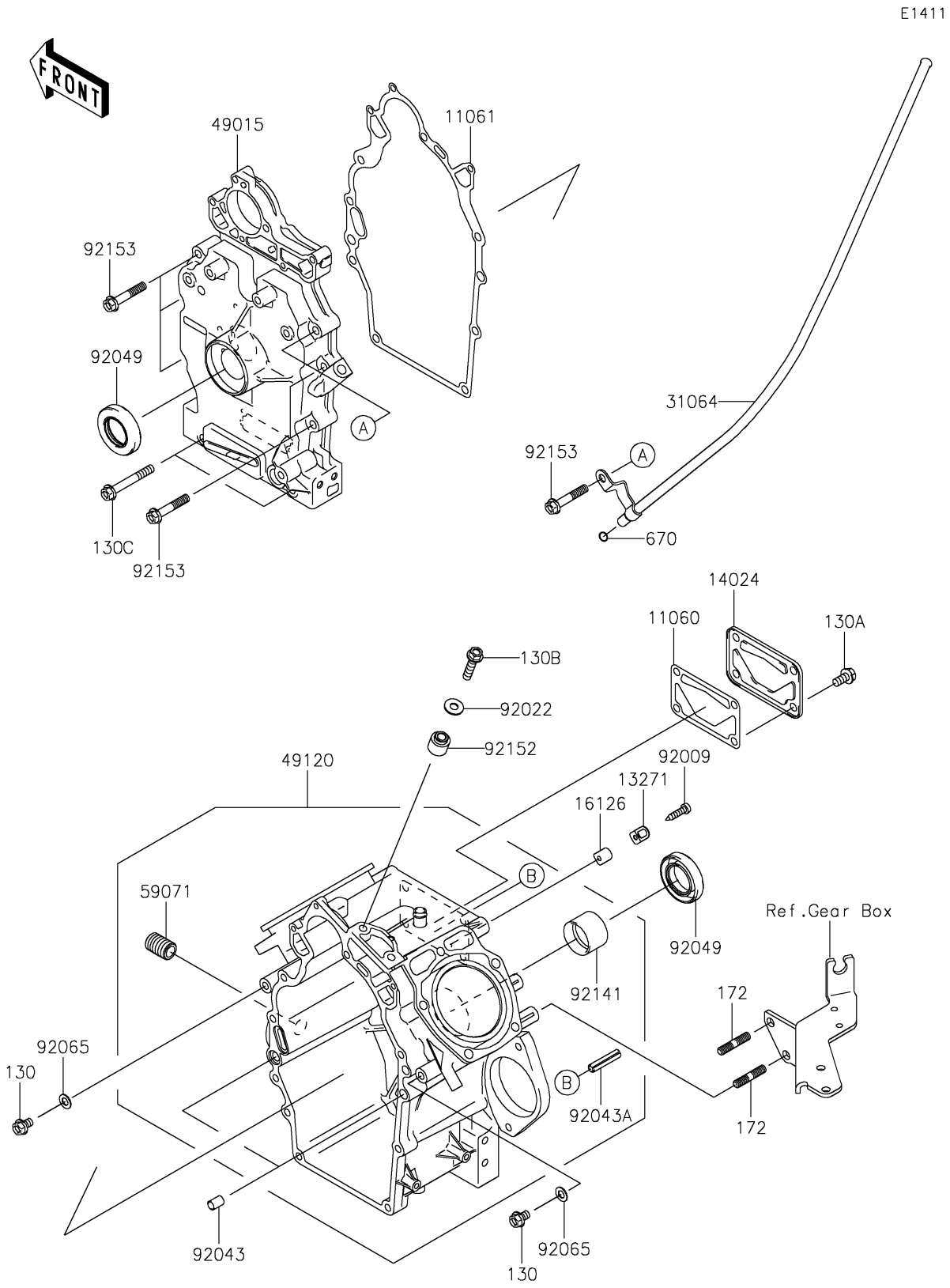

© 2026 Kawasaki Motors Corp., U.S.A.

2027 MULE™ 4010 TRANS4x4®

PARTS LIST

Crankcase

ITEM NAME	PART NUMBER	QUANTITY
GASKET,BREATHER,COVER (Ref # 11060)	11060-2089	1
GASKET,CRANKCASE COVER (Ref # 11061)	11061-1680	1
PLATE (Ref # 13271)	13271-2054	1
COVER (Ref # 14024)	14024-2292	1
VALVE (Ref # 16126)	16126-2146	1
PIPE-COMP (Ref # 31064)	31064-0713	1
COVER-CRANKCASE (Ref # 49015)	49015-6324	1
CRANKCASE-COMP (Ref # 49120)	49120-0847	1
JOINT,OIL FILTER (Ref # 59071)	59071-0743	1
SCREW (Ref # 92009)	92009-2308	1
WASHER,8.5X20X1.6 (Ref # 92022)	92022-1561	1
PIN,DOWEL,10X14 (Ref # 92043)	92043-1037	2
PIN,2X25 (Ref # 92043A)	92043-2227	1
SEAL-OIL (Ref # 92049)	92049-2112	2
GASKET,8.5X16X1 (Ref # 92065)	92065-023	2
BEARING-PLANE (Ref # 92141)	92141-2122	1
COLLAR (Ref # 92152)	92152-1901	1
BOLT,FLANGED,8X45 (Ref # 92153)	92153-2130	6
BOLT-FLANGED,8X12 (Ref # 130)	130AB0812	2
BOLT-FLANGED,8X16 (Ref # 130A)	130BA0816	4
BOLT-FLANGED,8X35 (Ref # 130B)	130BA0835	1
BOLT-FLANGED,8X60 (Ref # 130C)	130CA0860	2
BOLT-STUD,8X25 (Ref # 172)	172BA0825	2
O RING,10MM (Ref # 670)	670B2010	1

© 2026 Kawasaki Motors Corp., U.S.A.