2027 MULE SX™ 4x4 XC LE

PARTS DIAGRAM

Crankcase

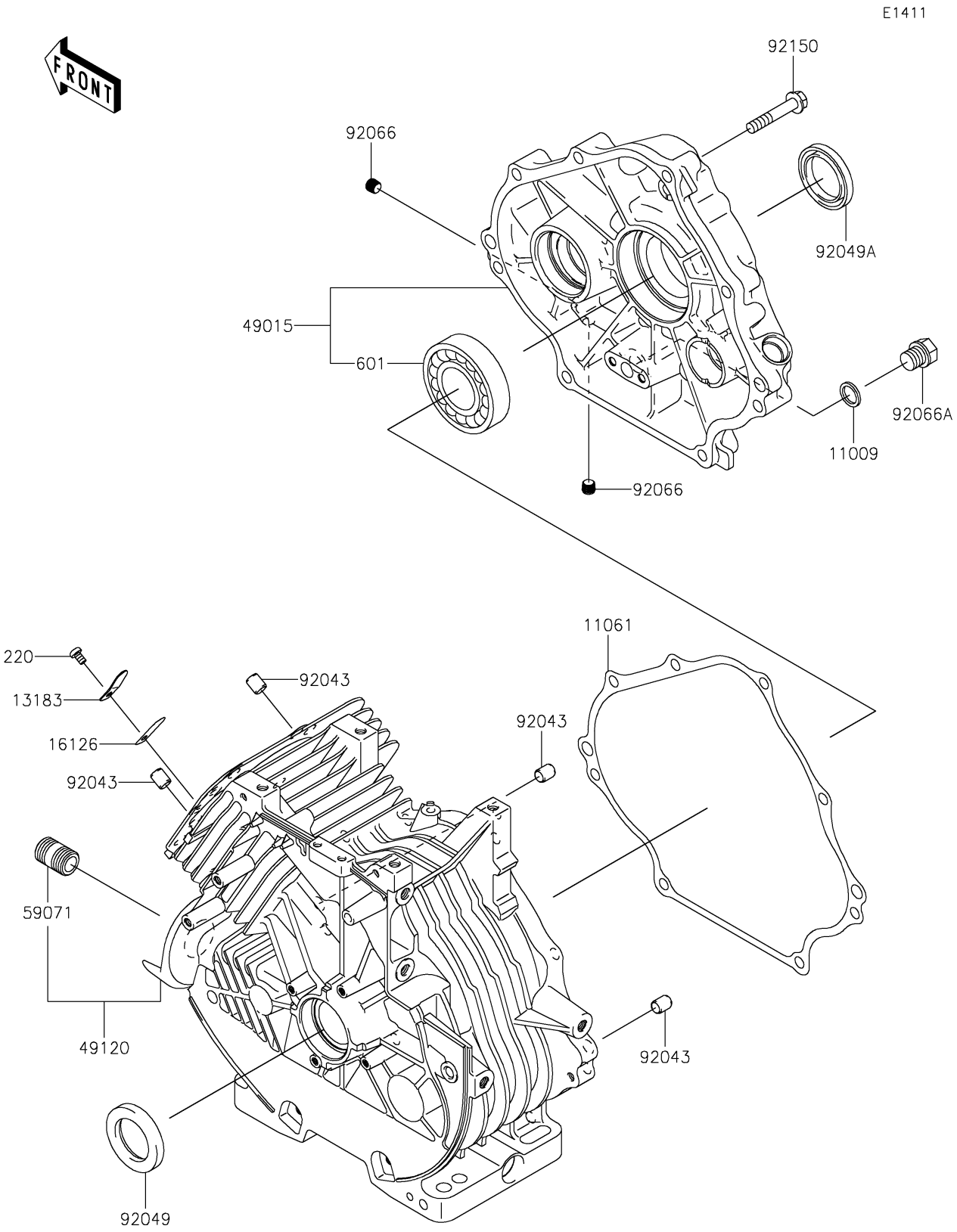

© 2026 Kawasaki Motors Corp., U.S.A.

2027 MULE SX™ 4x4 XC LE

PARTS LIST

Crankcase

ITEM NAME	PART NUMBER	QUANTITY
GASKET (Ref # 11009)	11009-2175	1
GASKET,COVER-CRANKCASE (Ref # 11061)	11061-1661	1
PLATE (Ref # 13183)	13183-2120	1
VALVE (Ref # 16126)	16126-2146	1
COVER-CRANKCASE (Ref # 49015)	49015-0038	1
CRANKCASE-COMP (Ref # 49120)	49120-6208	1
JOINT,OIL FILTER (Ref # 59071)	59071-0743	1
PIN (Ref # 92043)	92043-7001	4
SEAL-OIL,SD 35X48X8 R HS (Ref # 92049)	92049-7010	1
SEAL-OIL (Ref # 92049A)	92049-7018	1
PLUG (Ref # 92066)	92066-0881	2
PLUG,14X12 (Ref # 92066A)	92066-2253	1
BOLT,8X45 (Ref # 92150)	92150-2252	8
SCREW-PAN-CROS,5X8 (Ref # 220)	220AA0508	1
BEARING-BALL (Ref # 601)	601A6207	1

© 2026 Kawasaki Motors Corp., U.S.A.