2027 MULE™ 4010 TRANS4x4® CAMO

Kawasaki
Let the Good Times Roll®

PARTS DIAGRAM

Headlight(s)

F2710

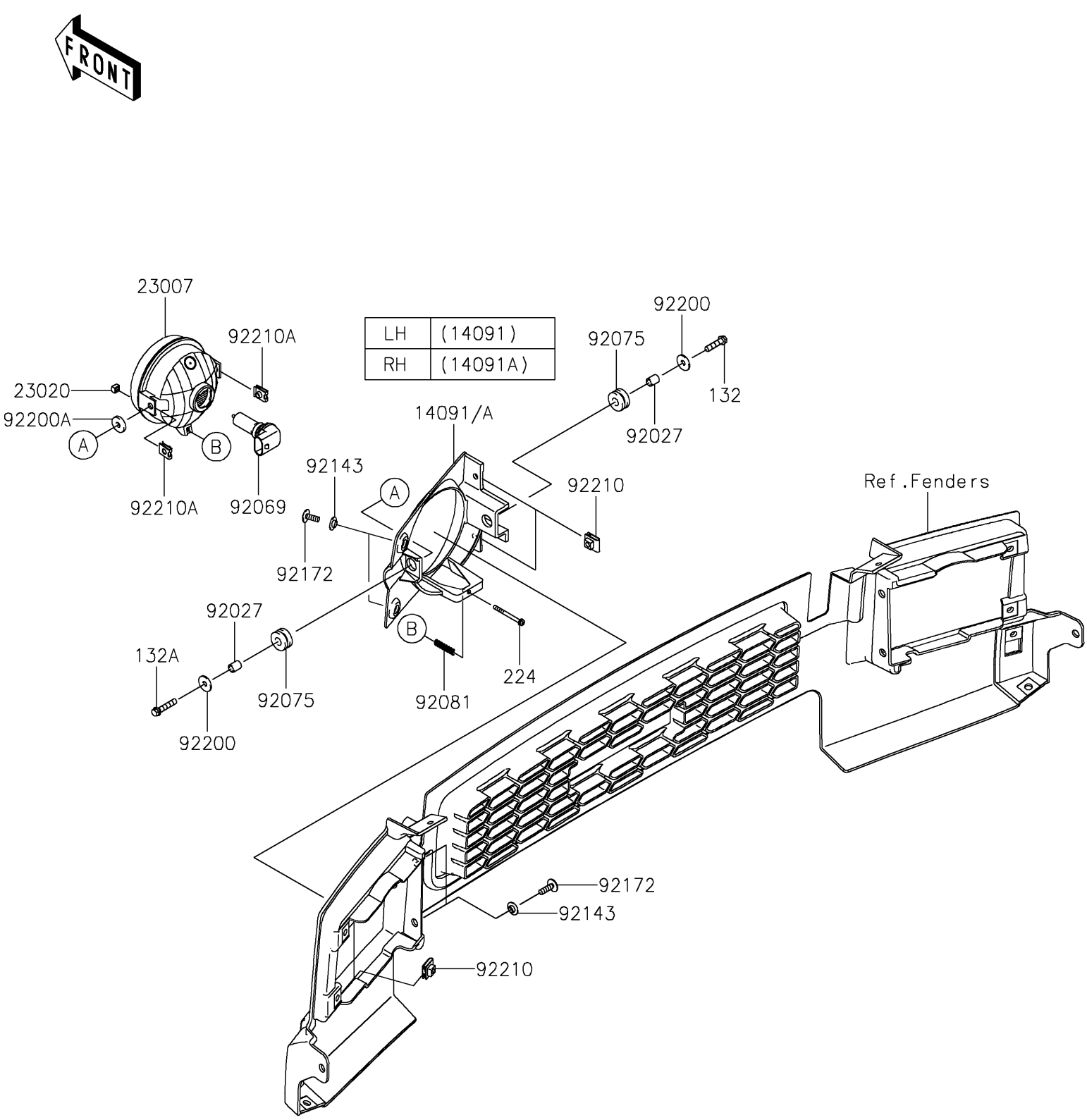

© 2026 Kawasaki Motors Corp., U.S.A.

2027 MULE™ 4010 TRANS4x4® CAMO

Kawasaki
Let the Good Times Roll®

PARTS LIST

Headlight(s)

ITEM NAME	PART NUMBER	QUANTITY
COVER,HEAD LAMP,LH (Ref # 14091)	14091-0827	1
COVER,HEAD LAMP,RH (Ref # 14091A)	14091-0828	1
LENS-COMP,HEAD LAMP (Ref # 23007)	23007-0220	2
NUT,4MM,FOCUS ADJUST (Ref # 23020)	23020-018	2
COLLAR,6.8X10X12 (Ref # 92027)	92027-162	4
BULB,12V 35/35W (Ref # 92069)	92069-0102	2
DAMPER,10X24X12 (Ref # 92075)	92075-1690	4
SPRING,FOCUS ADJUST (Ref # 92081)	92081-1896	2
COLLAR (Ref # 92143)	92143-1087	8
SCREW,TAPPING,6X20 (Ref # 92172)	92172-0488	8
WASHER,6.5X20X1.6 (Ref # 92200)	92200-0283	4
WASHER,6.5X20X3.2 (Ref # 92200A)	92200-0359	2
NUT,LEAF SPRING,6MM (Ref # 92210)	92210-0624	8
NUT (Ref # 92210A)	92210-1125	4
BOLT-FLANGED-SMALL,6X25 (Ref # 132)	132BA0625	2
BOLT-FLANGED-SMALL,6X30 (Ref # 132A)	132BA0630	2
SCREW-PAN-WP-CROS,4X45 (Ref # 224)	224AA0445	2

© 2026 Kawasaki Motors Corp., U.S.A.