2027 MULE™ 4010 TRANS4x4® CAMO

Kawasaki
Let the Good Times Roll®

PARTS DIAGRAM

Transmission

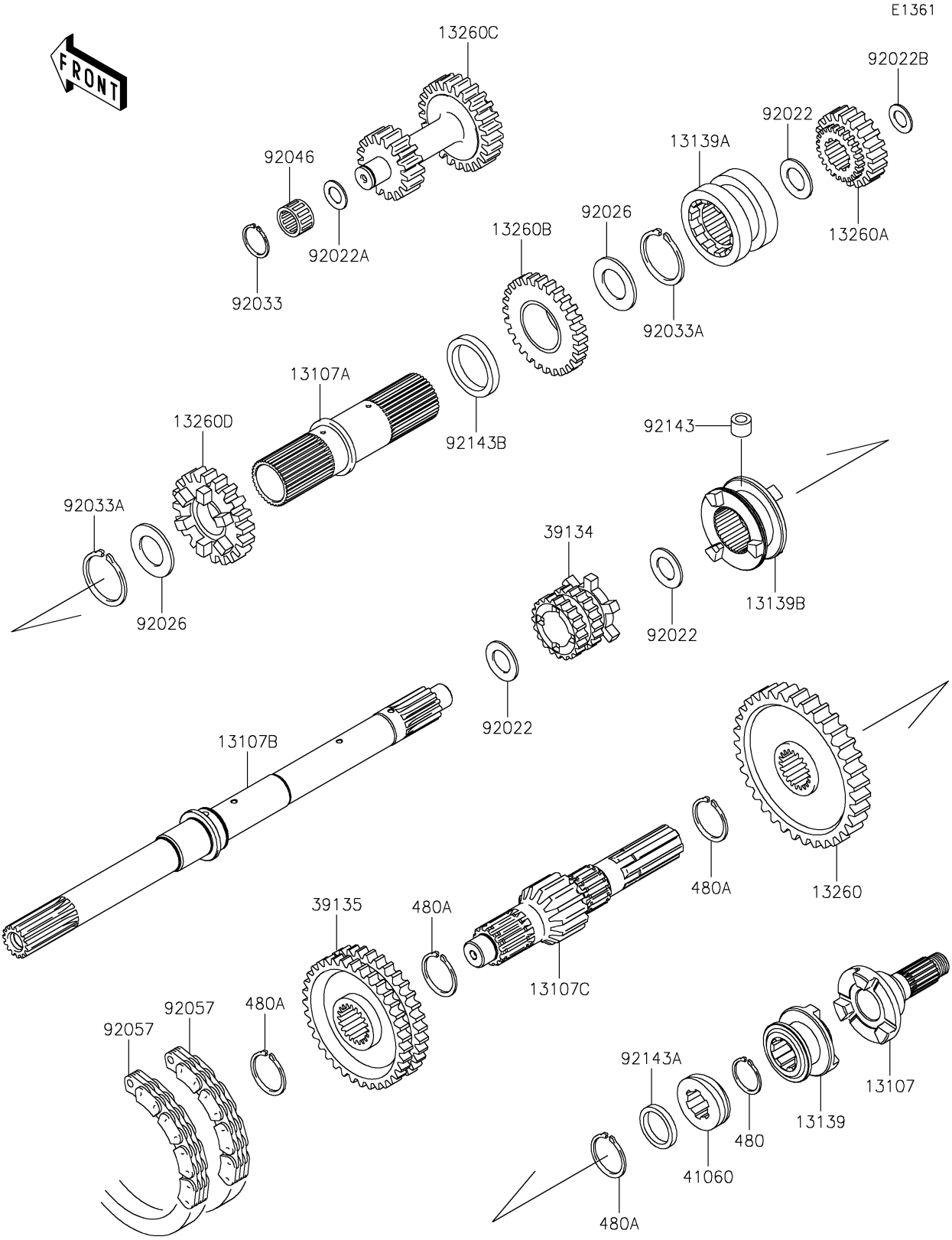

© 2026 Kawasaki Motors Corp., U.S.A.

2027 MULE™ 4010 TRANS4x4® CAMO

Kawasaki
Let the Good Times Roll®

PARTS LIST

Transmission

ITEM NAME	PART NUMBER	QUANTITY
SHAFT,2WD/4WD (Ref # 13107)	13107-0106	1
SHAFT,INPUT OUTER (Ref # 13107A)	13107-1309	1
SHAFT,INPUT (Ref # 13107B)	13107-1470	1
SHAFT,OUTPUT,14T (Ref # 13107C)	13107-1517	1
SHIFTER,2WD/4WD (Ref # 13139)	13139-0010	1
SHIFTER,SPEED,HI/LOW (Ref # 13139A)	13139-1069	1
SHIFTER,FR/RR (Ref # 13139B)	13139-1072	1
GEAR,OUTPUT REVERSE,51T (Ref # 13260)	13260-1288	1
GEAR,INPUT REDUCTION,20T (Ref # 13260A)	13260-1289	1
GEAR,INPUT REDUCTION,28T (Ref # 13260B)	13260-1290	1
GEAR,REDUCTION,17T&25T (Ref # 13260C)	13260-1291	1
GEAR,INPUT 28T (Ref # 13260D)	13260-1462	1
SPROCKET-DRIVE,20T (Ref # 39134)	39134-1055	1
SPROCKET-DRIVEN,41T (Ref # 39135)	39135-1055	1
GEAR-METER SCREW (Ref # 41060)	41060-1147	1
WASHER,25.3X33X1 (Ref # 92022)	92022-1109	3
WASHER,17.3X28X1 (Ref # 92022A)	92022-255	1
WASHER,17.3X30X1.4 (Ref # 92022B)	92022-270	1
SPACER,35.3X44X0.5 (Ref # 92026)	92026-1375	2
RING-SNAP (Ref # 92033)	92033-032	1
RING-SNAP (Ref # 92033A)	92033-1269	2
BEARING-NEEDLE,K17X23X13.8 (Ref # 92046)	92046-1184	1
CHAIN,REVERSE,81RH2520,54L (Ref # 92057)	92057-1364	2
COLLAR,8X14X10.5 (Ref # 92143)	92143-1497	1
COLLAR,25X32X4.5 (Ref # 92143A)	92143-1597	1
COLLAR (Ref # 92143B)	92143-1599	1
CIRCLIP-TYPE-C,25MM (Ref # 480)	480J2500	1
CIRCLIP-TYPE-C,30MM (Ref # 480A)	480J3000	4

© 2026 Kawasaki Motors Corp., U.S.A.