2027 MULE 4000 TRANS™

PARTS DIAGRAM

Rear Hubs/Brakes

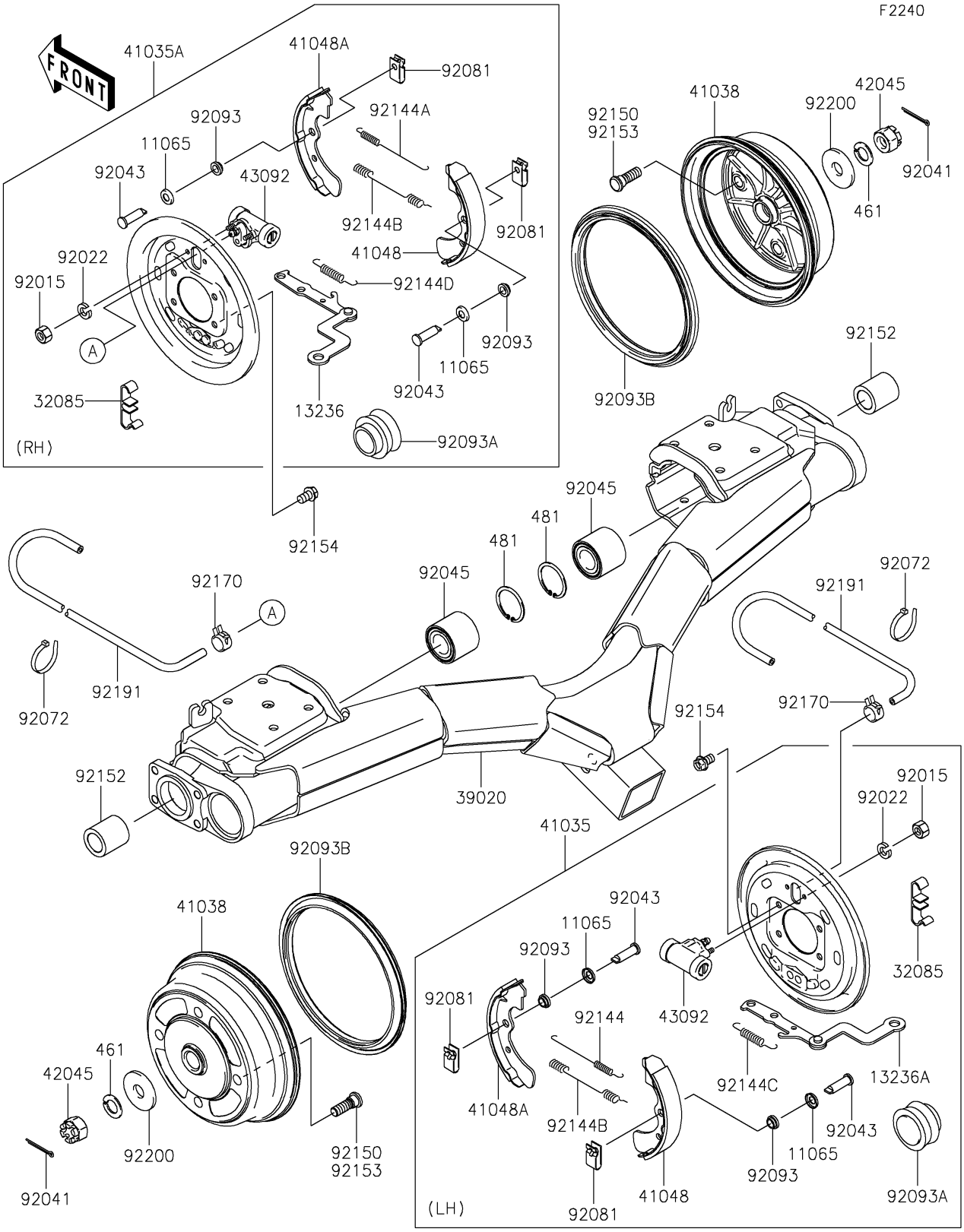

© 2026 Kawasaki Motors Corp., U.S.A.

2027 MULE 4000 TRANS™

PARTS LIST

Rear Hubs/Brakes

Kawasaki
Let the Good Times Roll®

ITEM NAME	PART NUMBER	QUANTITY
CAP (Ref # 11065)	11065-1175	4
LEVER-COMP,RR BRAKE PANEL,RH (Ref # 13236)	13236-1355	1
LEVER-COMP,RR BRAKE PANEL,LH (Ref # 13236A)	13236-1356	1
STOPPER,REAR BRAKE LEVER (Ref # 32085)	32085-1298	2
BRACKET-COMP-REAR SUSP (Ref # 39020)	39020-0005	1
PANEL-ASSY-BRAKE,RR,LH (Ref # 41035)	41035-7506	1
PANEL-ASSY-BRAKE,RR,RH (Ref # 41035A)	41035-7508	1
DRUM,REAR BRAKE (Ref # 41038)	41038-0035	2
SHOE-BRAKE (Ref # 41048)	41048-7502	2
SHOE-BRAKE (Ref # 41048A)	41048-7503	2
NUT,CASTLE,18MM (Ref # 42045)	42045-018	2
CYLINDER,REAR WHEEL (Ref # 43092)	43092-1053	2
NUT,6MM (Ref # 92015)	92015-1729	4
WASHER,SPRING,6MM (Ref # 92022)	92022-1951	4
COTTER,4.0X35 (Ref # 92041)	92041-1053	2
PIN (Ref # 92043)	92043-1636	4
BEARING-BALL,25BWD02CA68 (Ref # 92045)	92045-0107	2
BAND,L=123 (Ref # 92072)	92072-030	6
SPRING,SHOE CLAMP (Ref # 92081)	92081-1904	4
SEAL (Ref # 92093)	92093-1532	4
SEAL (Ref # 92093A)	92093-1533	2
SEAL,BS184.8X13.5ZS (Ref # 92093B)	92093-1543	2
SPRING,BRAKE (Ref # 92144)	92144-1299	1
SPRING,BRAKE (Ref # 92144A)	92144-1300	1
SPRING,BRAKE (Ref # 92144B)	92144-1301	2
SPRING,ROD,LH (Ref # 92144C)	92144-1302	1
SPRING,ROD,RH (Ref # 92144D)	92144-1303	1
BOLT (Ref # 92150)	92150-1366	8
COLLAR,25.1X38X40.8 (Ref # 92152)	92152-1276	2

© 2026 Kawasaki Motors Corp., U.S.A.

2027 MULE 4000 TRANS™

PARTS LIST

Rear Hubs/Brakes

ITEM NAME	PART NUMBER	QUANTITY
BOLT,12MM (Ref # 92153)	92153-1915	8
BOLT,FLANGED,10X16 (Ref # 92154)	92154-7268	8
CLAMP (Ref # 92170)	92170-2042	2
TUBE,4.7X9.5X1100 (Ref # 92191)	92191-1525	2
WASHER,18.5X52X4.5 (Ref # 92200)	92200-1474	2
WASHER-SPRING,18MM (Ref # 461)	461DA1800	2
CIRCLIP-TYPE-C,52MM (Ref # 481)	481J5200	2

© 2026 Kawasaki Motors Corp., U.S.A.