2027 MULE 4000 TRANS™

PARTS DIAGRAM

Fenders

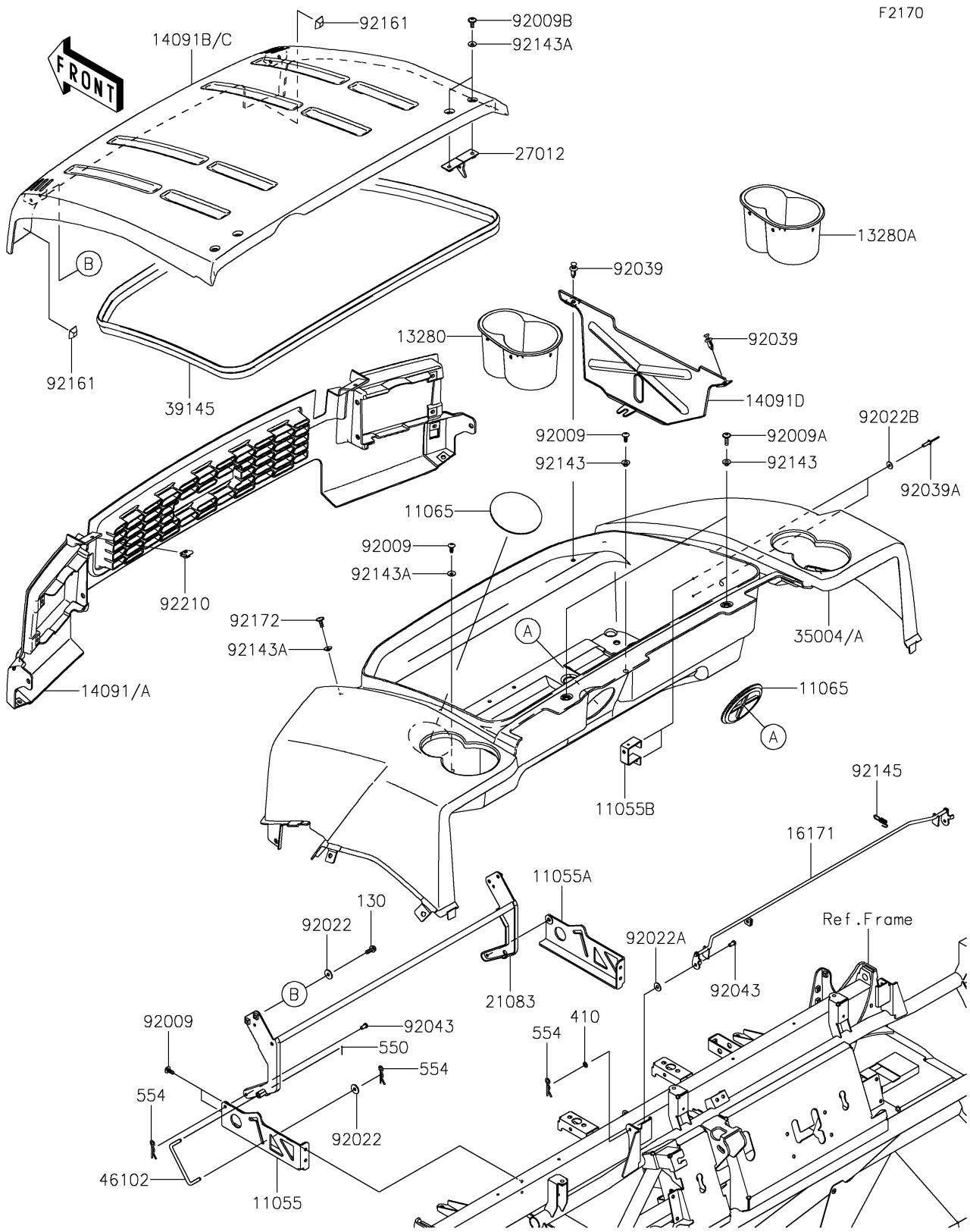

© 2026 Kawasaki Motors Corp., U.S.A.

2027 MULE 4000 TRANS™

PARTS LIST

Fenders

ITEM NAME	PART NUMBER	QUANTITY
BRACKET,HINGE,LH (Ref # 11055)	11055-0037	1
BRACKET,HINGE,RH (Ref # 11055A)	11055-0038	1
BRACKET,RESERVOIR TANK (Ref # 11055B)	11055-0124	1
CAP,F.BLACK (Ref # 11065)	11065-1053-6Z	2
HOLDER,CUP HOLDER,LH,F.BLACK (Ref # 13280)	13280-0265-6Z	1
HOLDER,CUP HOLDER,RH,F.BLACK (Ref # 13280A)	13280-0266-6Z	1
COVER,FRONT GRILLE,B.WHITE (Ref # 14091)	14091-0818-266	1
COVER,FRONT GRILLE,T.GREEN (Ref # 14091A)	14091-0818-42S	1
COVER,FRONT FENDER,B.WHITE (Ref # 14091B)	14091-0829-266	1
COVER,FRONT FENDER,T.GREEN (Ref # 14091C)	14091-0829-42S	1
COVER,RESERVOIR TANK (Ref # 14091D)	14091-1715	1
LINK (Ref # 16171)	16171-0015	1
ARM,HOOD (Ref # 21083)	21083-0051	1
HOOK,HOOD (Ref # 27012)	27012-0119	2
FENDER-FRONT,CNT,B.WHITE (Ref # 35004)	35004-0096-266	1
FENDER-FRONT,CNT,T.GREEN (Ref # 35004A)	35004-0096-42S	1
TRIM-SEAL,L=2350 (Ref # 39145)	39145-0032	1
ROD (Ref # 46102)	46102-0103	1
SCREW,TAPPING,6X16 (Ref # 92009)	92009-1166	6
SCREW,6X22,BLACK (Ref # 92009A)	92009-1256	2
SCREW,6X16 (Ref # 92009B)	92009-1621	4
WASHER,6.5X20X1.6,BLACK (Ref # 92022)	92022-1346	5
WASHER,7X18X1.2 (Ref # 92022A)	92022-1545	2
WASHER,4.3X12.5X1 (Ref # 92022B)	92022-1949	2
RIVET (Ref # 92039)	92039-0865	2
RIVET (Ref # 92039A)	92039-1150	2
PIN,6X9 (Ref # 92043)	92043-1626	4
COLLAR (Ref # 92143)	92143-1057	3
COLLAR (Ref # 92143A)	92143-1087	7

© 2026 Kawasaki Motors Corp., U.S.A.

2027 MULE 4000 TRANS™

PARTS LIST

Fenders

ITEM NAME	PART NUMBER	QUANTITY
SPRING (Ref # 92145)	92145-0215	1
DAMPER,FR HOOD (Ref # 92161)	92161-0790	2
SCREW,TAPPING,6X20 (Ref # 92172)	92172-0488	2
NUT,LEAF SPRING,6MM (Ref # 92210)	92210-0624	2
BOLT-FLANGED,6X16 (Ref # 130)	130BA0616	4
WASHER-PLAIN-SMALL (Ref # 410)	410AA0600	2
PIN-COTTER,1.6X15 (Ref # 550)	550AA1615	1
PIN-SNAP,1.2X21.2 (Ref # 554)	554DA0600	5

© 2026 Kawasaki Motors Corp., U.S.A.