2027 MULE™ 4000

PARTS DIAGRAM

Front Hubs/Brakes

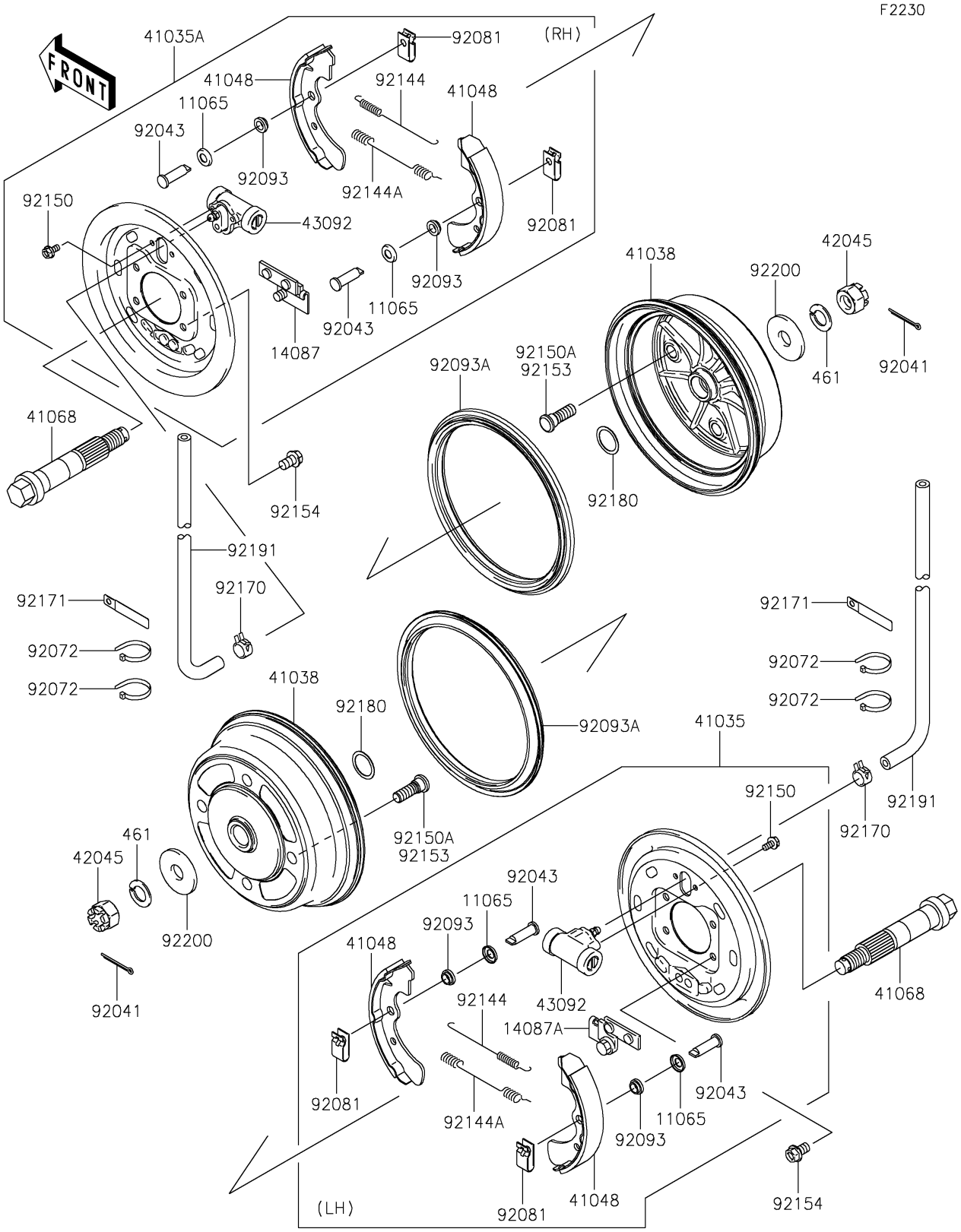

© 2026 Kawasaki Motors Corp., U.S.A.

2027 MULE™ 4000

PARTS LIST

Front Hubs/Brakes

ITEM NAME	PART NUMBER	QUANTITY
CAP (Ref # 11065)	11065-1175	4
RETAINER-ASSY,RH (Ref # 14087)	14087-1001	1
RETAINER-ASSY,LH (Ref # 14087A)	14087-1002	1
PANEL-ASSY-BRAKE,FR,LH (Ref # 41035)	41035-7502	1
PANEL-ASSY-BRAKE,FR,RH (Ref # 41035A)	41035-7504	1
DRUM,FRONT BRAKE (Ref # 41038)	41038-0034	2
SHOE-BRAKE (Ref # 41048)	41048-7501	4
AXLE,FR (Ref # 41068)	41068-1296	2
NUT,CASTLE,18MM (Ref # 42045)	42045-018	2
CYLINDER,FRONT BRAKE PANEL (Ref # 43092)	43092-1054	2
COTTER,4.0X35 (Ref # 92041)	92041-1053	2
PIN (Ref # 92043)	92043-1636	4
BAND,L=123 (Ref # 92072)	92072-030	4
SPRING,SHOE CLAMP (Ref # 92081)	92081-1904	4
SEAL (Ref # 92093)	92093-1532	4
SEAL,BS184.8X13.5ZS (Ref # 92093A)	92093-1543	2
SPRING,BRAKE (Ref # 92144)	92144-1300	2
SPRING,BRAKE (Ref # 92144A)	92144-1301	2
BOLT,FLANGED,6X12 (Ref # 92150)	92150-1166	4
BOLT (Ref # 92150A)	92150-1366	8
BOLT,12MM (Ref # 92153)	92153-1915	8
BOLT,FLANGED,10X16 (Ref # 92154)	92154-7268	8
CLAMP (Ref # 92170)	92170-2042	2
CLAMP,L=60 (Ref # 92171)	92171-0652	2
SHIM,25.2X32.5X0.6 (Ref # 92180)	92180-1353	2
TUBE,4.7X9.5X1100 (Ref # 92191)	92191-1525	2
WASHER,18.5X52X4.5 (Ref # 92200)	92200-1474	2
WASHER-SPRING,18MM (Ref # 461)	461DA1800	2

© 2026 Kawasaki Motors Corp., U.S.A.