2024 NINJA® ZX™-6R 40th ANNIVERSARY EDITION ABS

Kawasaki
Let the Good Times Roll®

PARTS DIAGRAM

Tires

F2210

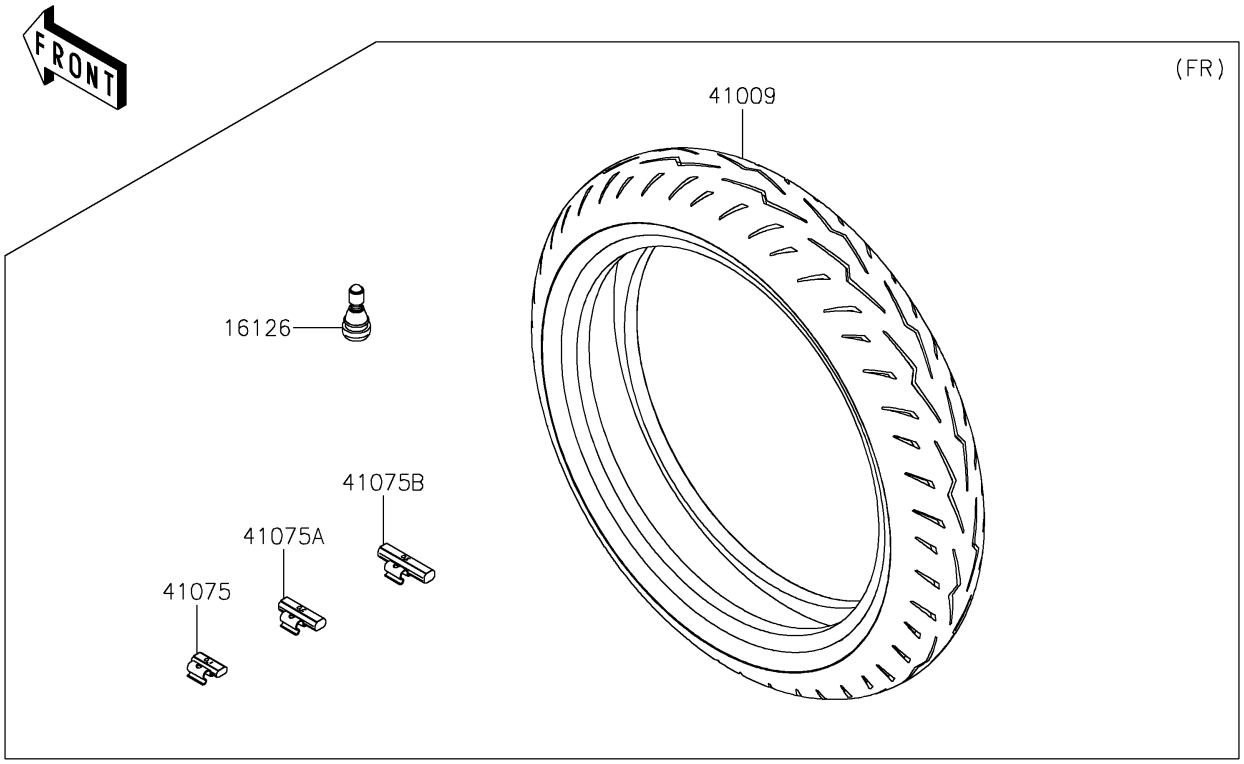

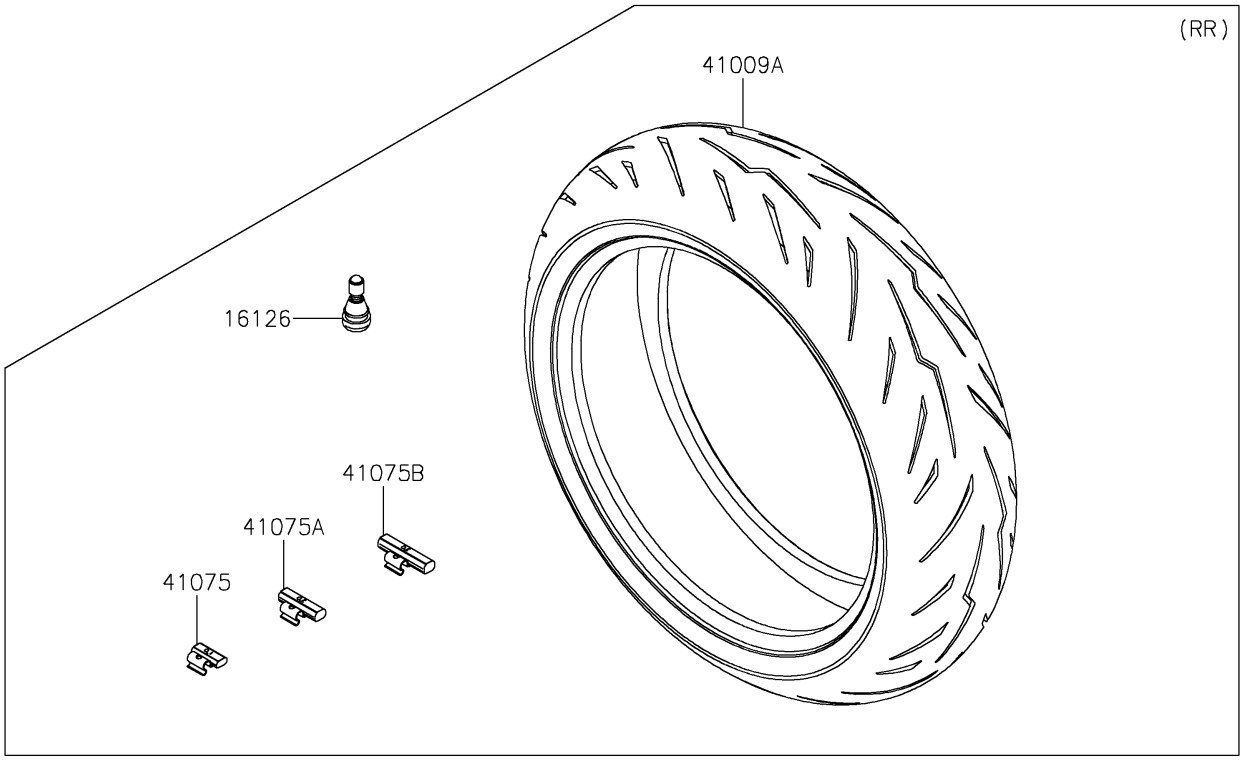

© 2026 Kawasaki Motors Corp., U.S.A.

2024 NINJA® ZX™-6R 40th ANNIVERSARY EDITION ABS

Kawasaki
Let the Good Times Roll®

PARTS LIST

Tires

ITEM NAME	PART NUMBER	QUANTITY
VALVE,TIRE (Ref # 16126)	16126-1140	2
TIRE,FR,120/70ZR17(58W),DR4 (Ref # 41009)	41009-0909	1
TIRE,RR,180/55ZR17(73W),DR4 (Ref # 41009A)	41009-0910	1
BALANCER-WHEEL,10G,SILVER (Ref # 41075)	41075-0007	AR
BALANCER-WHEEL,20G,SILVER (Ref # 41075A)	41075-0008	AR
BALANCER-WHEEL,30G,SILVER (Ref # 41075B)	41075-0009	AR

© 2026 Kawasaki Motors Corp., U.S.A.