2024 NINJA® ZX™-6R 40th ANNIVERSARY EDITION ABS

Kawasaki
Let the Good Times Roll®

PARTS DIAGRAM

Swingarm

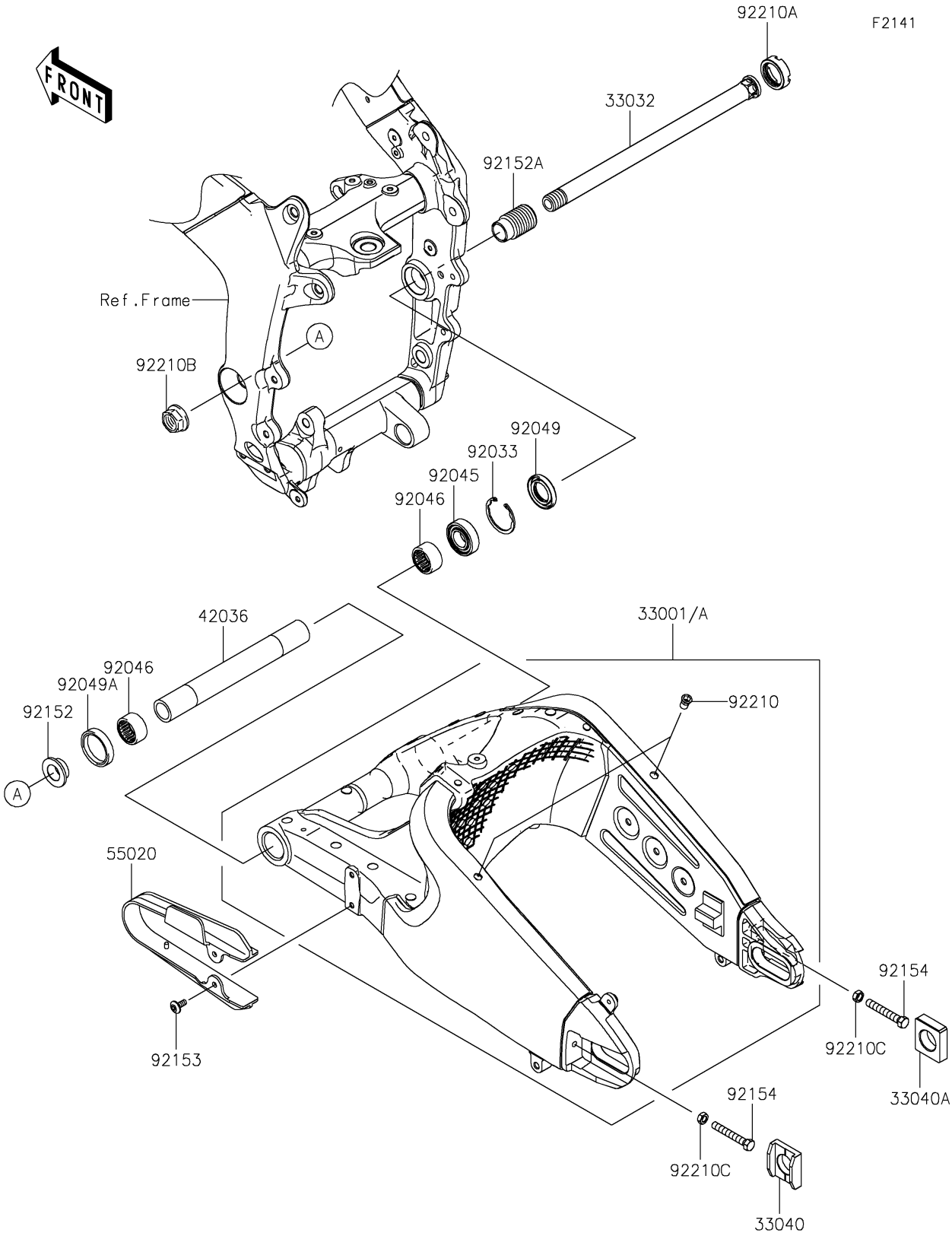

© 2026 Kawasaki Motors Corp., U.S.A.

2024 NINJA® ZX™-6R 40th ANNIVERSARY EDITION ABS

Kawasaki
Let the Good Times Roll®

PARTS LIST

Swingarm

ITEM NAME	PART NUMBER	QUANTITY
ARM-COMP-SWING (Ref # 33001)	33001-0584	1
ARM-COMP-SWING,F.S.BLACK (Ref # 33001A)	33001-0584-18R	1
SHAFT-SWING ARM (Ref # 33032)	33032-0044	1
ADJUSTER-CHAIN (Ref # 33040)	33040-0107	1
ADJUSTER-CHAIN (Ref # 33040A)	33040-1114	1
SLEEVE,20.1X28X226 (Ref # 42036)	42036-0069	1
GUARD,CHAIN (Ref # 55020)	55020-0384	1
RING-SNAP,42MM (Ref # 92033)	92033-1041	1
BEARING-BALL,6004UL11 (Ref # 92045)	92045-0017	1
BEARING-NEEDLE,7E-HVS 28X34X17 (Ref # 92046)	92046-0008	2
SEAL-OIL,MHSA25X42X6 (Ref # 92049)	92049-1314	1
SEAL-OIL,MHSA25X34X7 (Ref # 92049A)	92049-1352	1
COLLAR,SWING ARM,L=12.5 (Ref # 92152)	92152-1234	1
COLLAR,SWING ARM,L=47 (Ref # 92152A)	92152-2980	1
BOLT,SOCKET,6X14 (Ref # 92153)	92153-0422	1
BOLT-SMALL,8X55 (Ref # 92154)	92154-1962	2
NUT,6MM (Ref # 92210)	92210-0099	2
NUT,30MM (Ref # 92210A)	92210-0134	1
NUT,FLANGED,20MM (Ref # 92210B)	92210-0320	1
NUT-HEX-SMALL,8MM (Ref # 92210C)	92210-1459	2
ARM-COMP-SWING,P.SILVER (Ref # 33001B)	33001-0584-458	1

© 2026 Kawasaki Motors Corp., U.S.A.