2024 NINJA® ZX™-6R 40th ANNIVERSARY EDITION ABS

Kawasaki
Let the Good Times Roll®

PARTS DIAGRAM

Oil Pan

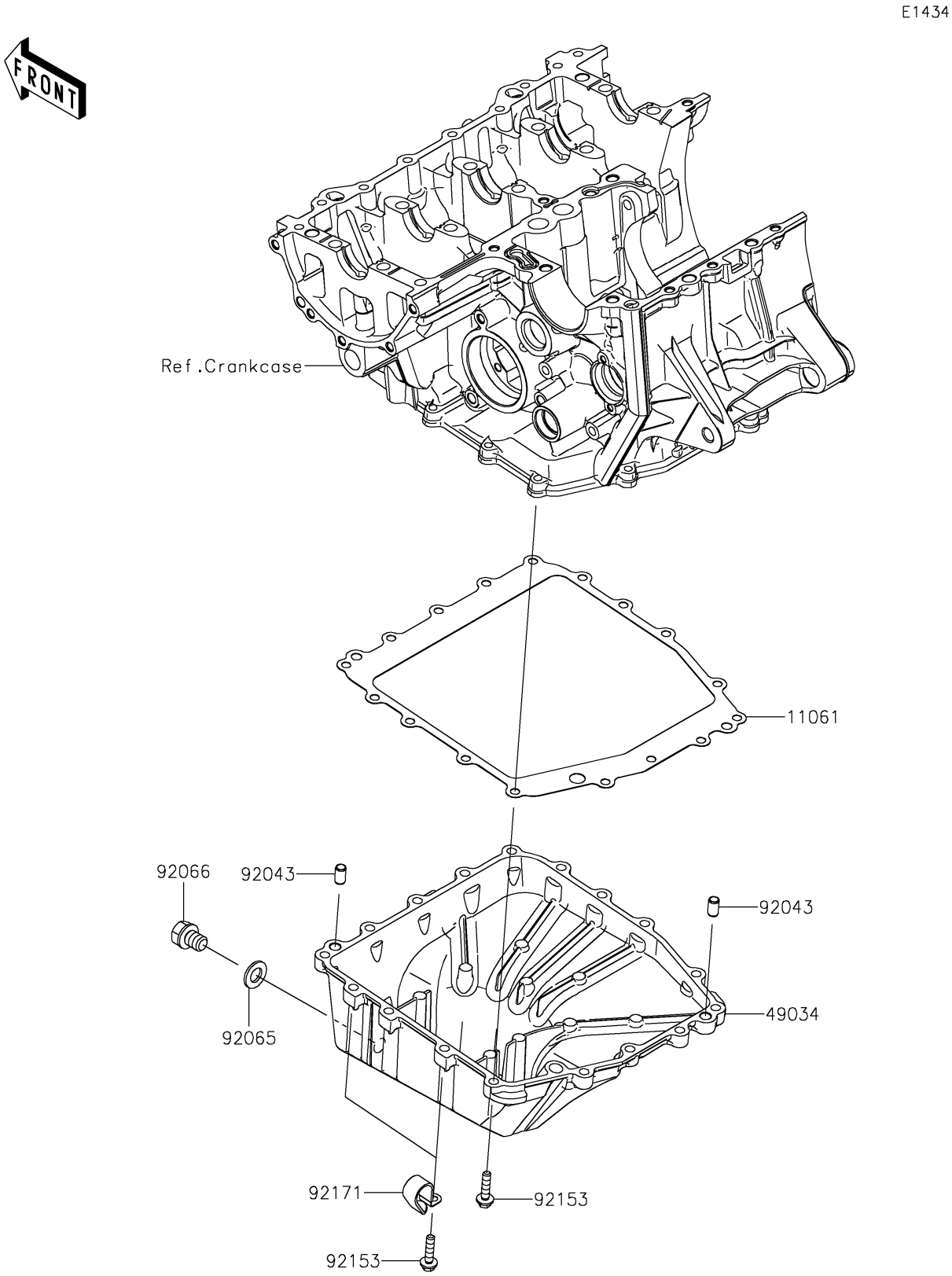

© 2026 Kawasaki Motors Corp., U.S.A.

2024 NINJA® ZX™-6R 40th ANNIVERSARY EDITION ABS

Kawasaki
Let the Good Times Roll®

PARTS LIST

Oil Pan

ITEM NAME	PART NUMBER	QUANTITY
GASKET,OIL PAN (Ref # 11061)	11061-0253	1
PAN-OIL (Ref # 49034)	49034-0031	1
PIN,6.2X8X14 (Ref # 92043)	92043-1263	2
GASKET,12X22X2 (Ref # 92065)	92065-097	1
PLUG,OIL DRAIN,12X15 (Ref # 92066)	92066-1174	1
BOLT,FLANGED,6X25 (Ref # 92153)	92153-1569	17
CLAMP (Ref # 92171)	92171-0911	2

© 2026 Kawasaki Motors Corp., U.S.A.