2027 Vulcan S

PARTS DIAGRAM

Accessory(Foot Peg)

F2910K

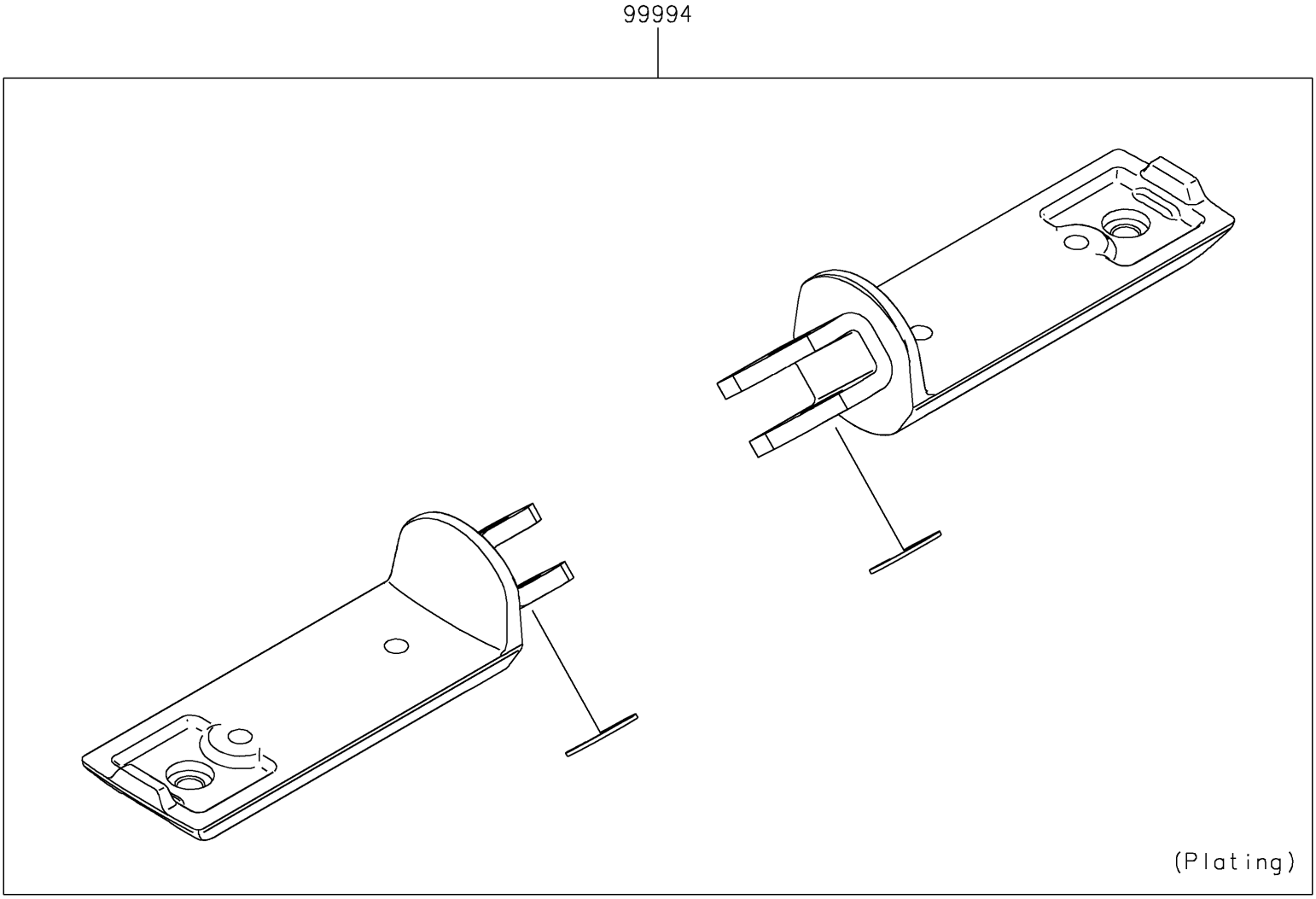

© 2026 Kawasaki Motors Corp., U.S.A.

2027 Vulcan S

PARTS LIST

Accessory(Foot Peg)

ITEM NAME	PART NUMBER	QUANTITY
KIT.,FOOT PEG (Ref # 99994)	99994-0542	1

© 2026 Kawasaki Motors Corp., U.S.A.