2027 Vulcan S

PARTS DIAGRAM

Accessory(Decals)

F2910G

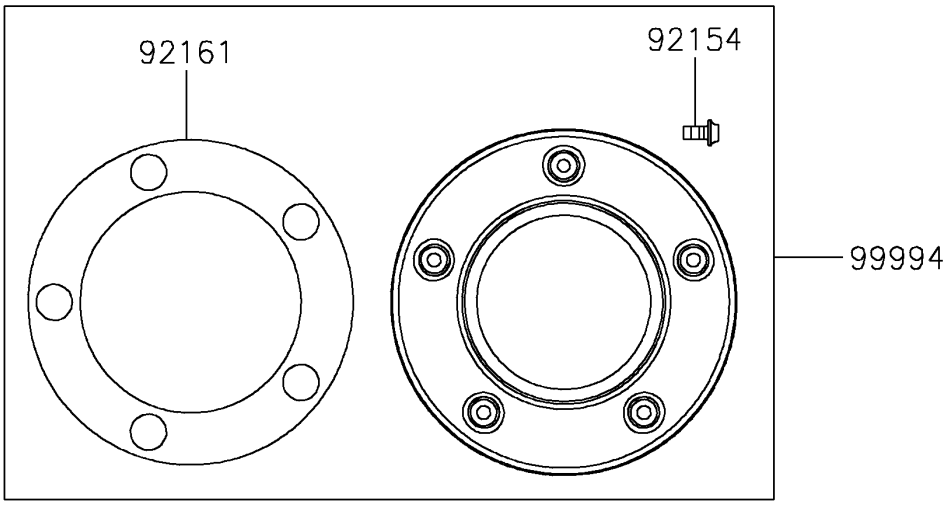

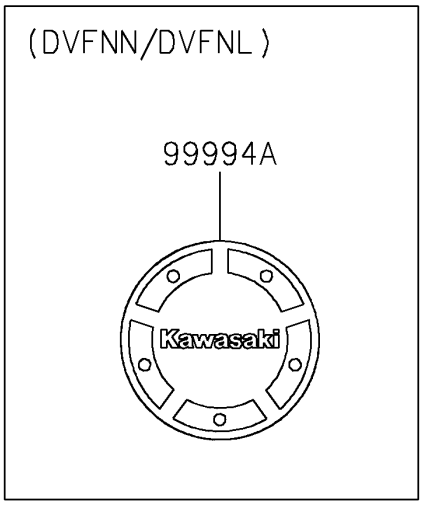

© 2026 Kawasaki Motors Corp., U.S.A.

2027 Vulcan S

PARTS LIST

Accessory(Decals)

ITEM NAME	PART NUMBER	QUANTITY

© 2026 Kawasaki Motors Corp., U.S.A.