2027 Vulcan S

PARTS DIAGRAM

Accessory(Decals)

F2910G

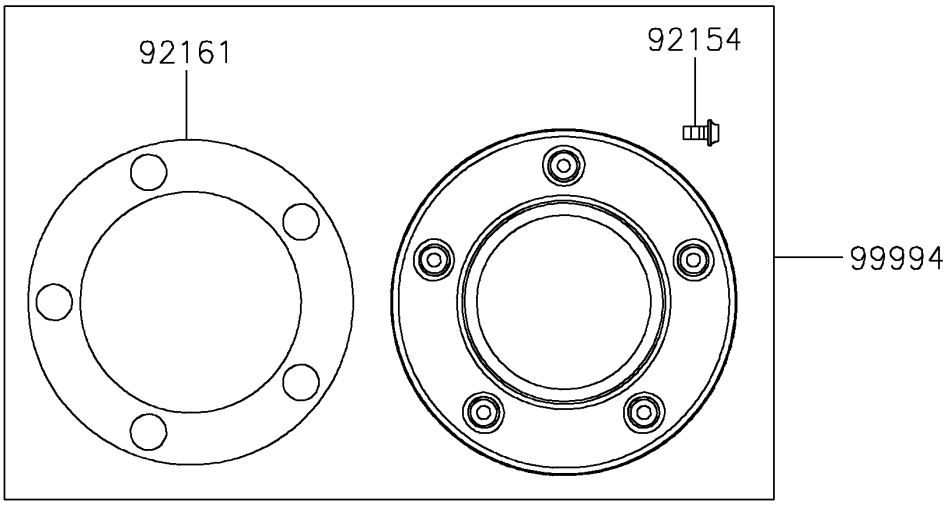

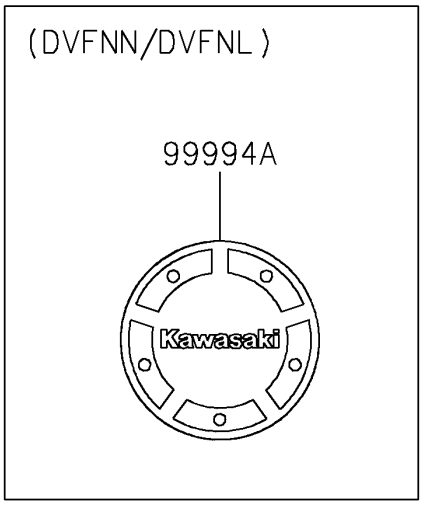

© 2026 Kawasaki Motors Corp., U.S.A.

2027 Vulcan S

PARTS LIST

Accessory(Decals)

ITEM NAME	PART NUMBER	QUANTITY
BOLT,SOCKET,5X10 (Ref # 92154)	92154-1691	5
DAMPER (Ref # 92161)	92161-1767	1
KIT-ACCESSORY,MARK,PLATING (Ref # 99994)	99994-0580	1
KIT-ACCESSORY,MARK,KAWASAKI (Ref # 99994A)	99994-0600	1

© 2026 Kawasaki Motors Corp., U.S.A.