2027 Vulcan S

PARTS DIAGRAM

Accessory(Muffler Cover)

Kawasaki
Let the Good Times Roll®

F2910

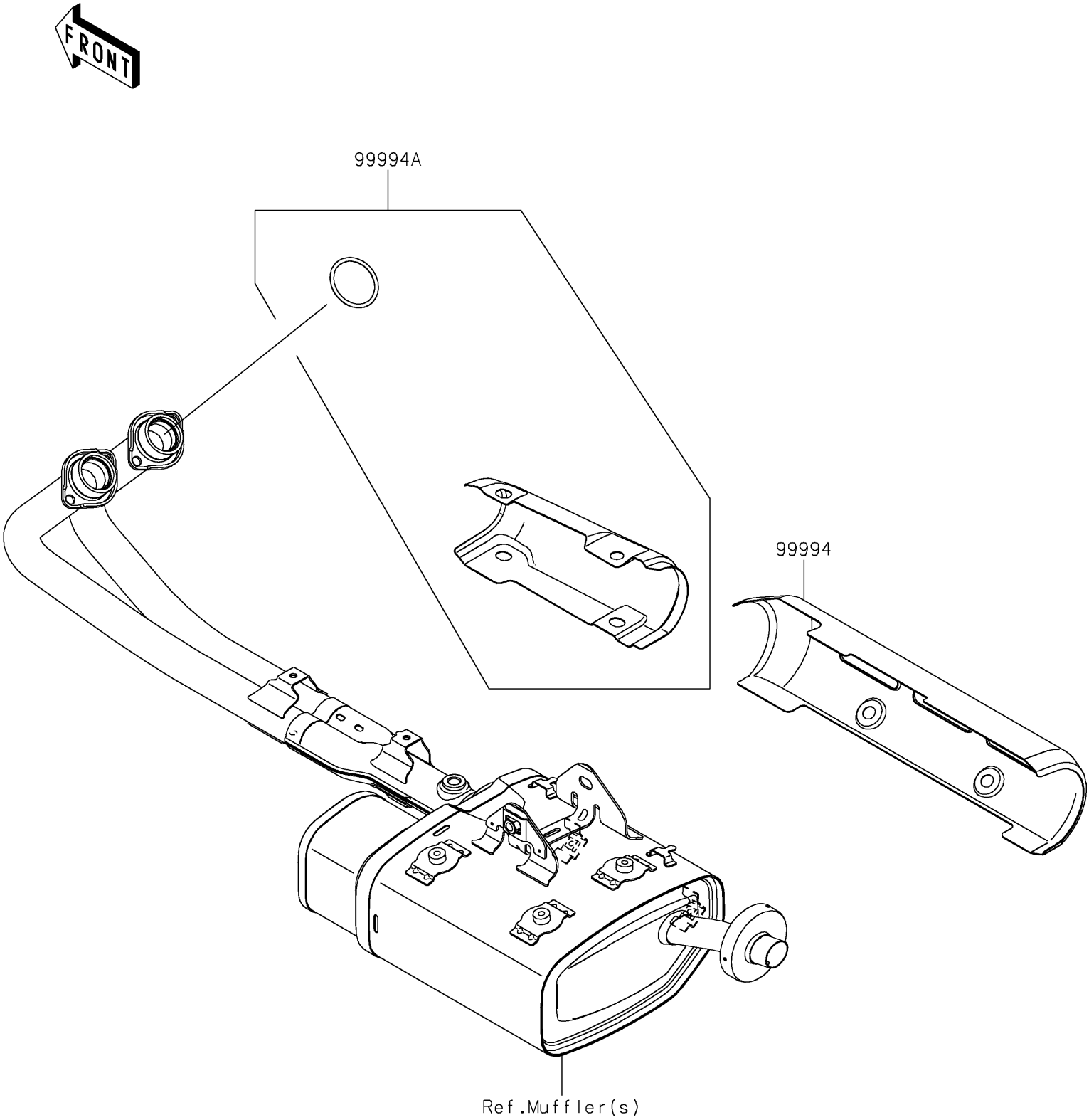

© 2026 Kawasaki Motors Corp., U.S.A.

2027 Vulcan S

PARTS LIST

Accessory(Muffler Cover)

ITEM NAME	PART NUMBER	QUANTITY
KIT-ACCESSORY,COVER,MUFFLER (Ref # 99994)	99994-0578	1
KIT-ACCESSORY,COVER,EX-PIPE (Ref # 99994A)	99994-1740	1

© 2026 Kawasaki Motors Corp., U.S.A.