# 2027 Vulcan S

## PARTS DIAGRAM

### Decals(DVFNN/DVFNL)

F2861

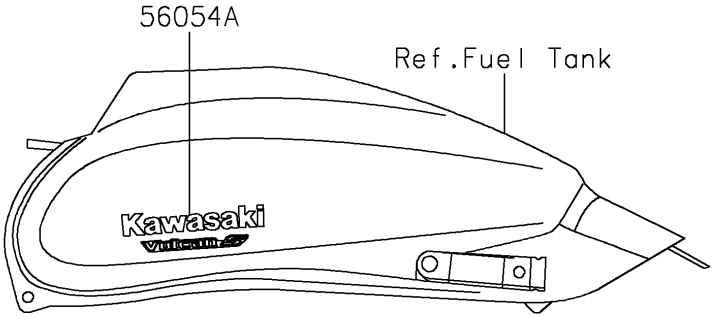


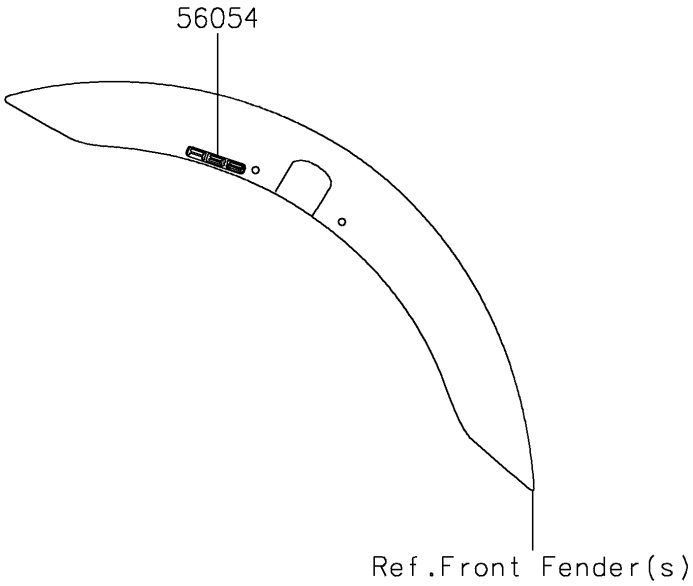


© 2026 Kawasaki Motors Corp., U.S.A.

# 2027 Vulcan S

## PARTS LIST

### Decals(DVFNN/DVFNL)

| ITEM NAME | PART NUMBER | QUANTITY |
|---|---|---|
| MARK,ABS (Ref # 56054) | 56054-1064 | 2 |
| MARK,KAWASAKI,VULCAN S (Ref # 56054A) | 56054-4484 | 2 |

© 2026 Kawasaki Motors Corp., U.S.A.