2027 Vulcan S

PARTS DIAGRAM

Decals(DVFNN/DVFNL)

F2861

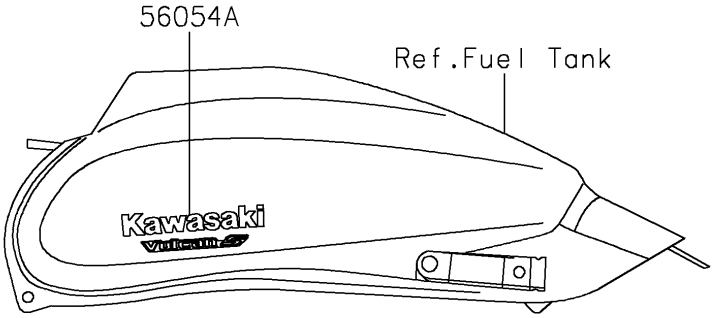

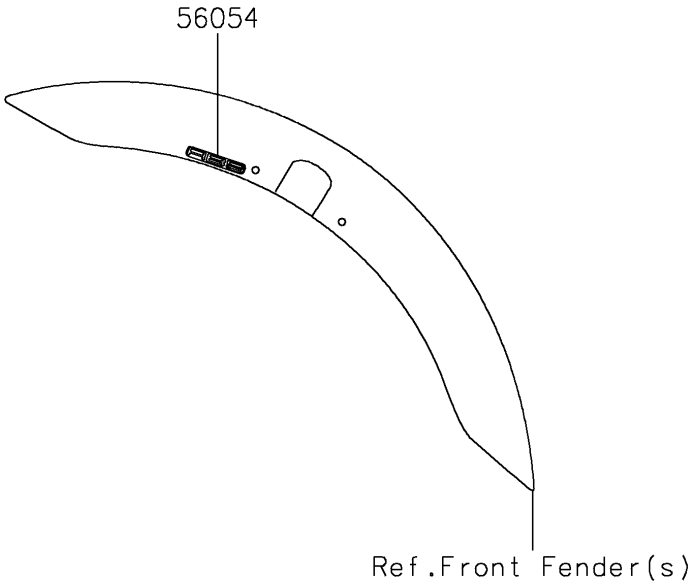

© 2026 Kawasaki Motors Corp., U.S.A.

2027 Vulcan S

PARTS LIST

Decals(DVFNN/DVFNL)

ITEM NAME	PART NUMBER	QUANTITY
MARK,ABS (Ref # 56054)	56054-1064	2
MARK,KAWASAKI,VULCAN S (Ref # 56054A)	56054-4484	2

© 2026 Kawasaki Motors Corp., U.S.A.