2027 Vulcan S

PARTS DIAGRAM

Labels

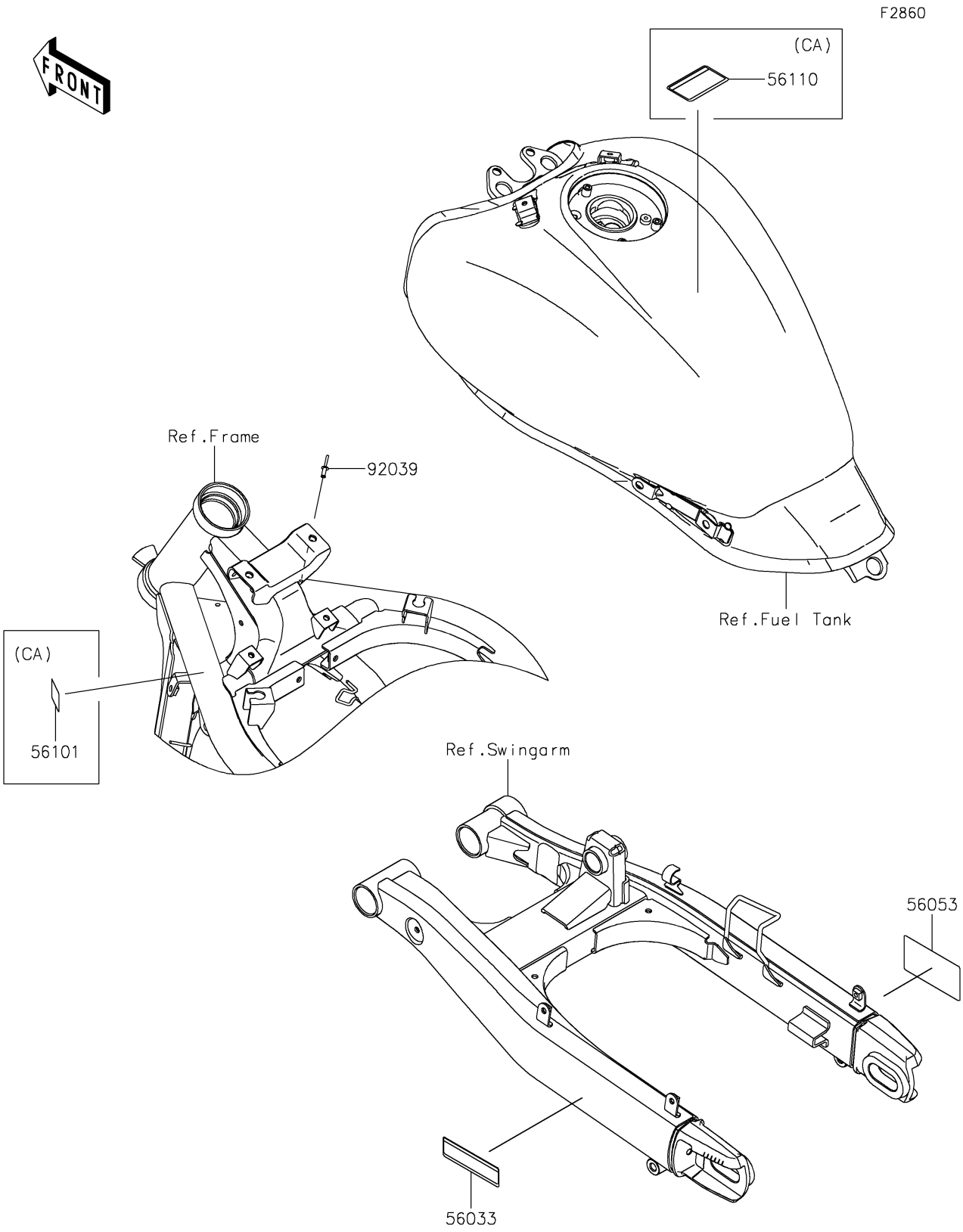

© 2026 Kawasaki Motors Corp., U.S.A.

2027 Vulcan S

PARTS LIST

Labels

ITEM NAME	PART NUMBER	QUANTITY
LABEL-MANUAL,CHAIN (Ref # 56033)	56033-1624	1
LABEL-SPECIFICATION,TIRE&LOAD (Ref # 56053)	56053-2792	1
RIVET (Ref # 92039)	92039-0759	1
L_____ (Ref # 56101)		1
L_____ (Ref # 56110)		1

© 2026 Kawasaki Motors Corp., U.S.A.