2027 Vulcan S

PARTS DIAGRAM

Owner's Tools

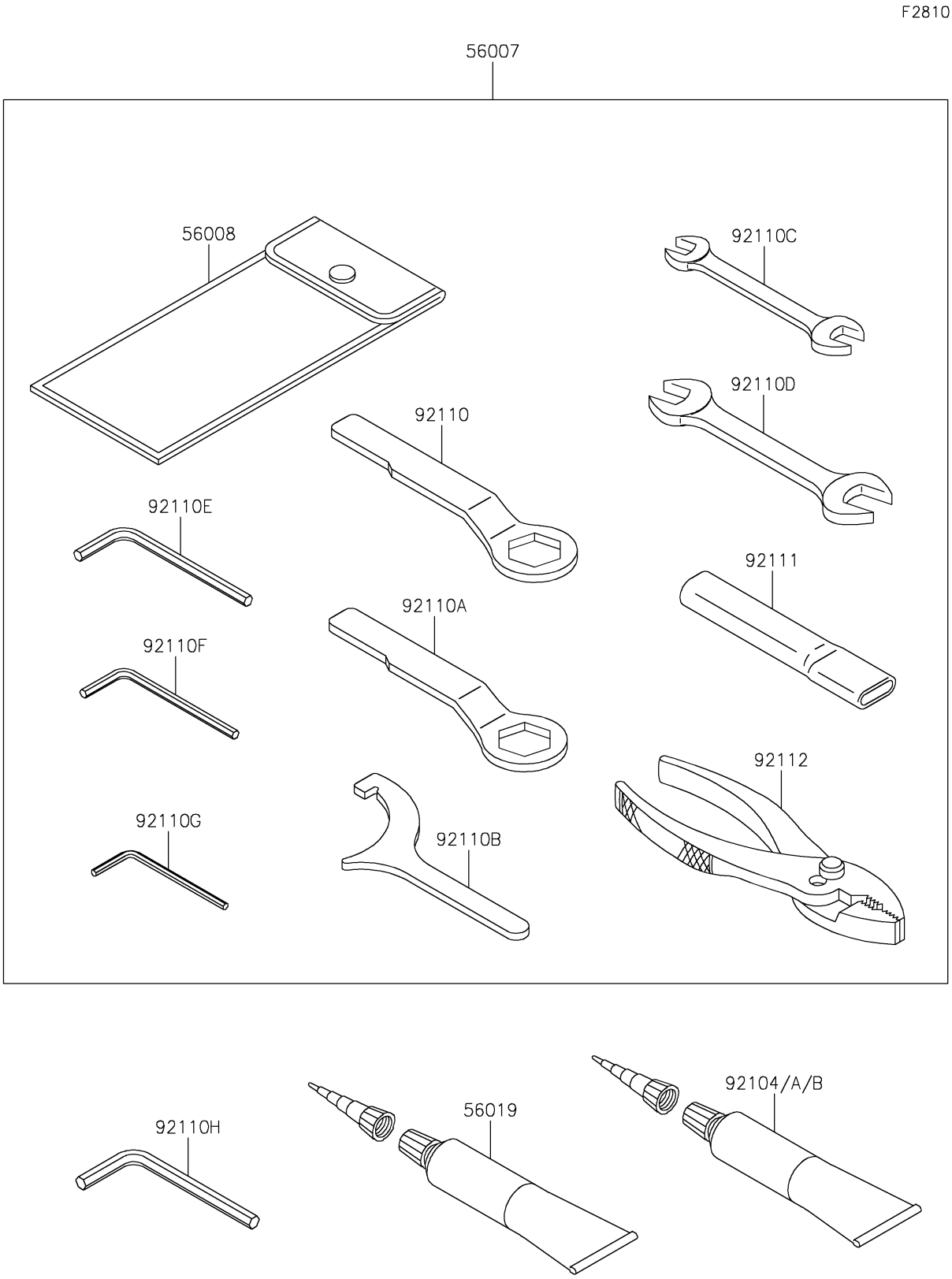

© 2026 Kawasaki Motors Corp., U.S.A.

2027 Vulcan S

PARTS LIST

Owner's Tools

ITEM NAME	PART NUMBER	QUANTITY

© 2026 Kawasaki Motors Corp., U.S.A.