2027 Vulcan S

PARTS DIAGRAM

Headlight(s)

F2710

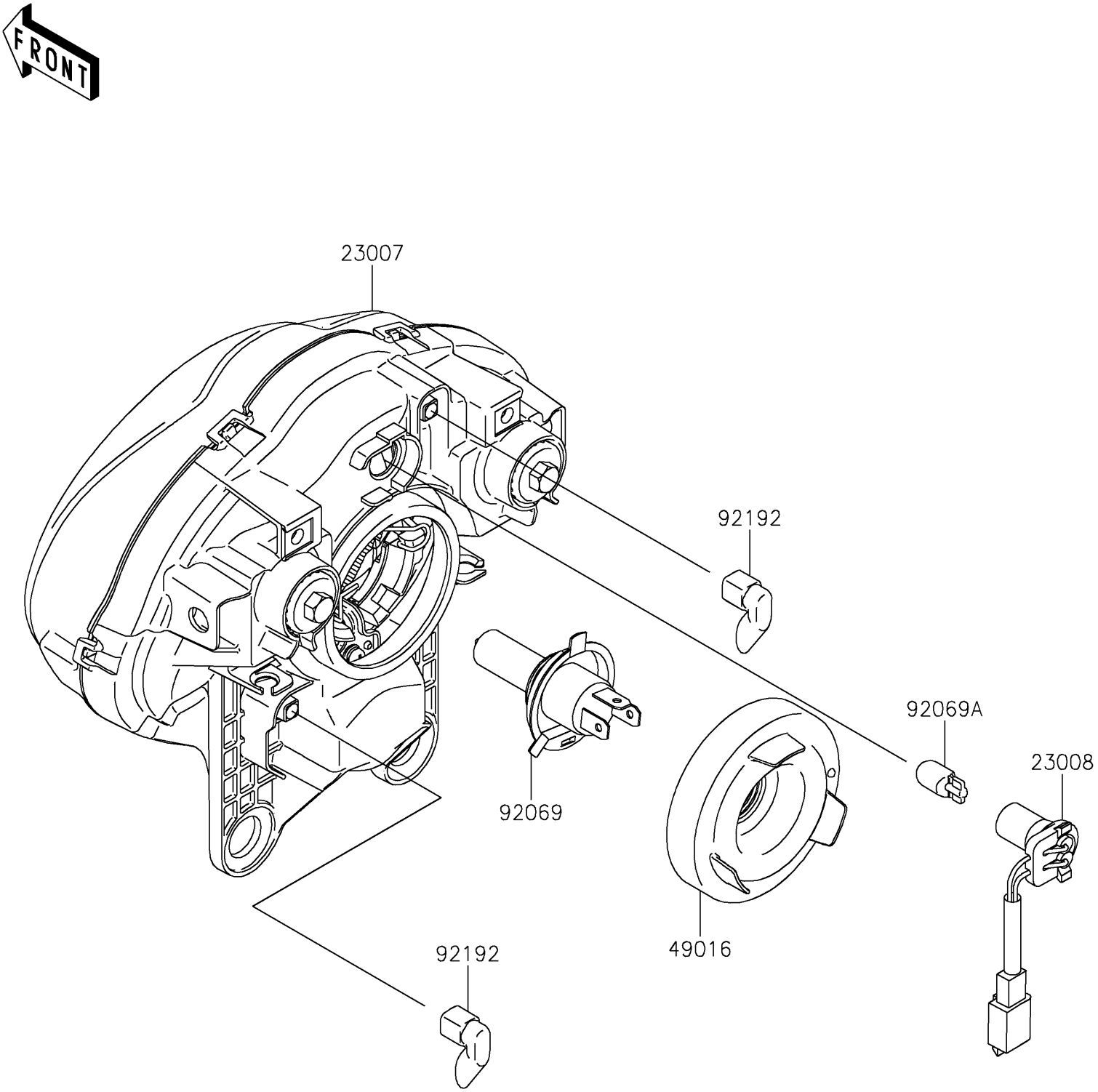

© 2026 Kawasaki Motors Corp., U.S.A.

2027 Vulcan S

PARTS LIST

Headlight(s)

ITEM NAME	PART NUMBER	QUANTITY
LENS-COMP (Ref # 23007)	23007-0191	1
SOCKET-ASSY (Ref # 23008)	23008-0158	1
COVER-SEAL (Ref # 49016)	49016-0627	1
BULB,12V 60/55W,H4 (Ref # 92069)	92069-0050	1
BULB,12V 5W (Ref # 92069A)	92069-1016	1
TUBE,BREATHER (Ref # 92192)	92192-1528	2

© 2026 Kawasaki Motors Corp., U.S.A.