2027 Vulcan S

PARTS DIAGRAM

Side Covers/Chain Cover

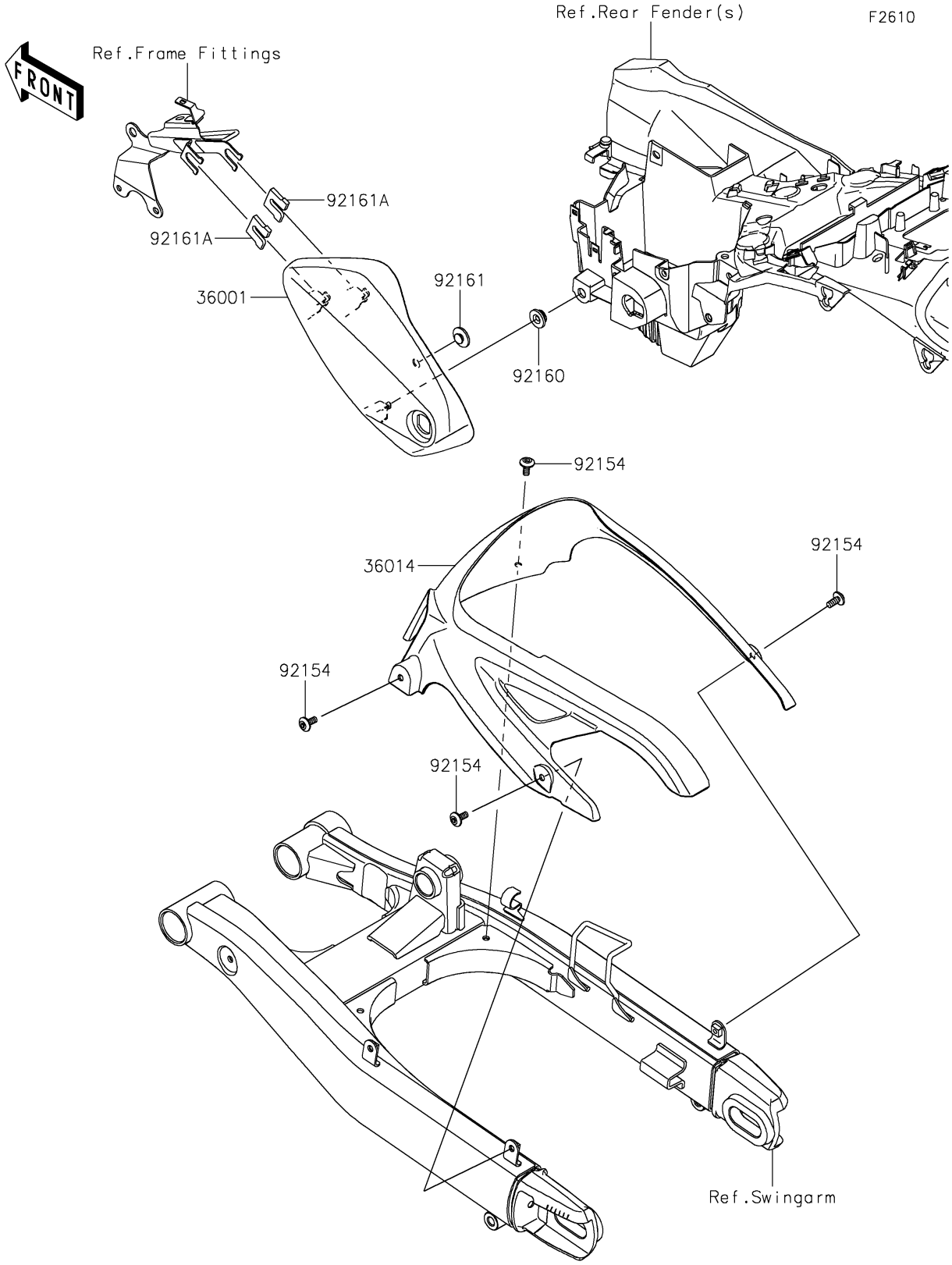

© 2026 Kawasaki Motors Corp., U.S.A.

2027 Vulcan S

PARTS LIST

Side Covers/Chain Cover

ITEM NAME	PART NUMBER	QUANTITY
COVER-SIDE,F.S.BLACK (Ref # 36001)	36001-0615-18T	1
CASE-CHAIN (Ref # 36014)	36014-0566	1
BOLT,SOCKET,6X14 (Ref # 92154)	92154-1511	4
DAMPER (Ref # 92160)	92160-1613	1
DAMPER,8X22X10 (Ref # 92161)	92161-1685	1
DAMPER (Ref # 92161A)	92161-1764	2

© 2026 Kawasaki Motors Corp., U.S.A.