# 2027 Vulcan S

## PARTS DIAGRAM

### Rear Brake

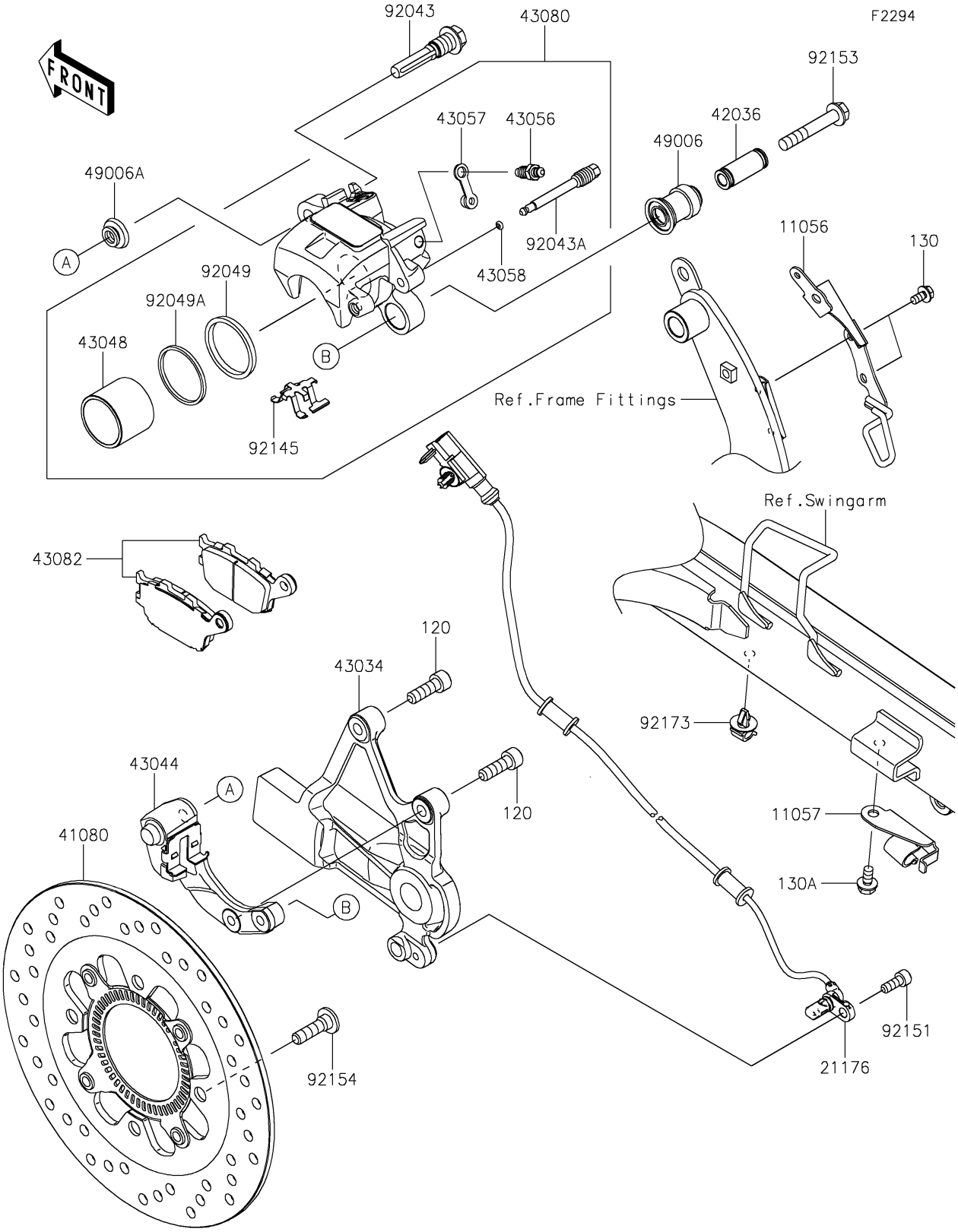


© 2026 Kawasaki Motors Corp., U.S.A.

# 2027 Vulcan S

## PARTS LIST

### Rear Brake

Kawasaki
Let the Good Times Roll®

| ITEM NAME | PART NUMBER | QUANTITY |
|---|---|---|
| BRACKET,SENSOR (Ref # 11056) | 11056-4199 | 1 |
| BRACKET,SWINGARM,LWR (Ref # 11057) | 11057-3989 | 1 |
| SENSOR,RR WHEEL SPEED (Ref # 21176) | 21176-0954 | 1 |
| DISC,RR,W/R,BLACK (Ref # 41080) | 41080-0628-11H | 1 |
| SLEEVE (Ref # 42036) | 42036-0050 | 1 |
| HOLDER-BRAKE,RR (Ref # 43034) | 43034-0161 | 1 |
| HOLDER-COMP-CALIPER (Ref # 43044) | 43044-0080 | 1 |
| PISTON-CALIPER (Ref # 43048) | 43048-0008 | 1 |
| BREATHER (Ref # 43056) | 43056-1055 | 1 |
| CAP-BREATHER (Ref # 43057) | 43057-1001 | 1 |
| RING,STOPPER (Ref # 43058) | 43058-1100 | 1 |
| CALIPER-SUB-ASSY,RR,BLACK (Ref # 43080) | 43080-0156-DJ | 1 |
| PAD-ASSY-BRAKE (Ref # 43082) | 43082-0155 | 1 |
| BOOT (Ref # 49006) | 49006-0058 | 1 |
| BOOT,CALIPER (Ref # 49006A) | 49006-1242 | 1 |
| PIN (Ref # 92043) | 92043-0137 | 1 |
| PIN,HANGER (Ref # 92043A) | 92043-0820 | 1 |
| SEAL-OIL (Ref # 92049) | 92049-1449 | 1 |
| SEAL-OIL (Ref # 92049A) | 92049-1450 | 1 |
| SPRING,PAD (Ref # 92145) | 92145-0493 | 1 |
| BOLT (Ref # 92151) | 92151-1166 | 1 |
| BOLT,FLANGED (Ref # 92153) | 92153-1826 | 1 |
| BOLT,SOCKET,8X30 (Ref # 92154) | 92154-0844 | 4 |
| CLAMP,CABLE CLIP (Ref # 92173) | 92173-1022 | 1 |
| BOLT-SOCKET,8X25 (Ref # 120) | 120CB0825 | 2 |
| BOLT-FLANGED,5X10 (Ref # 130) | 130BA0510 | 2 |
| BOLT-FLANGED,6X12 (Ref # 130A) | 130BA0612 | 1 |

© 2026 Kawasaki Motors Corp., U.S.A.