2027 Vulcan S

PARTS DIAGRAM

Front Brake

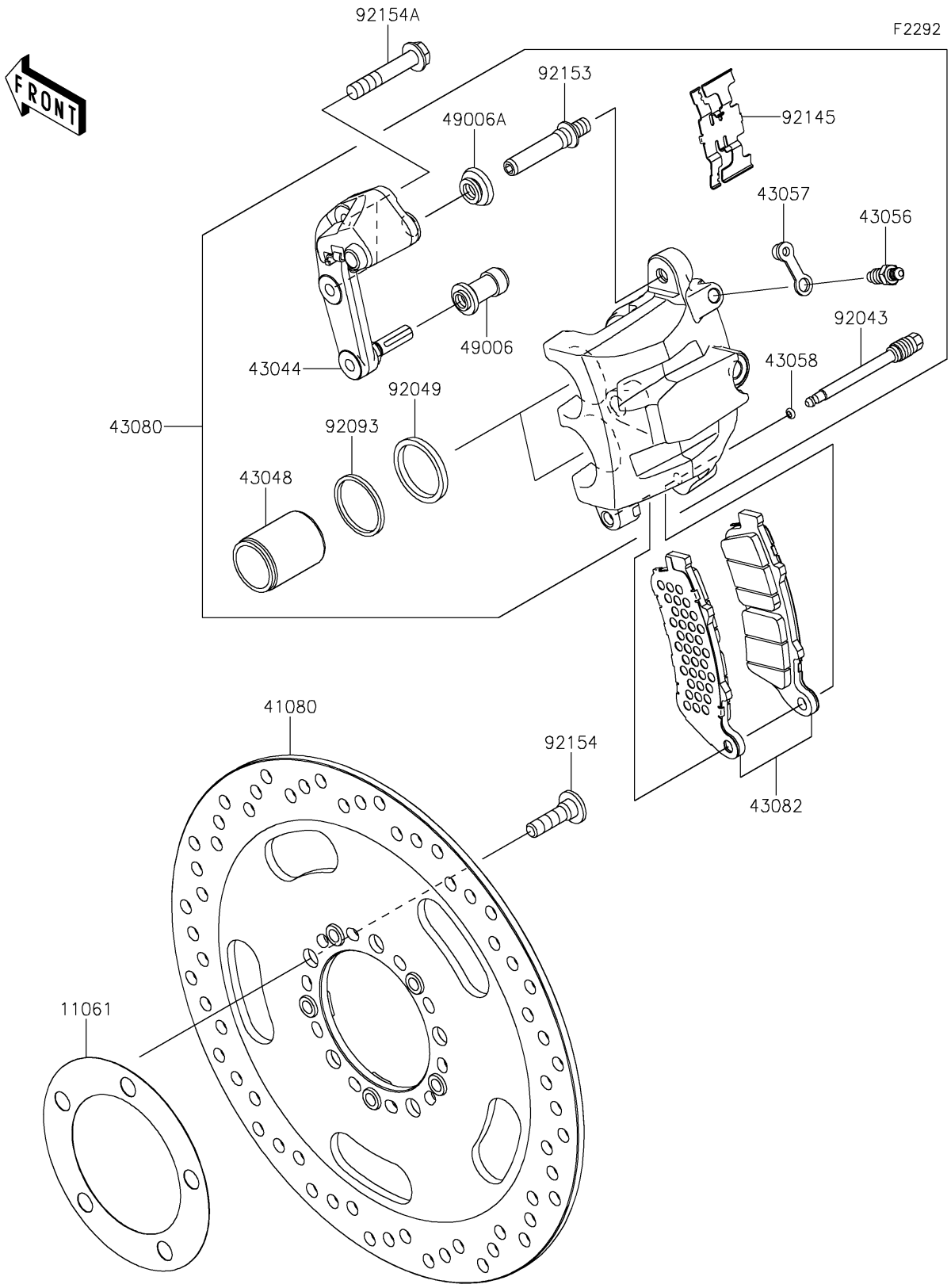

© 2026 Kawasaki Motors Corp., U.S.A.

2027 Vulcan S

PARTS LIST

Front Brake

ITEM NAME	PART NUMBER	QUANTITY
GASKET,DISC PLATE (Ref # 11061)	11061-0029	1
DISC,FR,W/R,BLACK (Ref # 41080)	41080-0723-11H	1
HOLDER-COMP-CALIPER (Ref # 43044)	43044-0077	1
PISTON-CALIPER (Ref # 43048)	43048-0026	2
BREATHER (Ref # 43056)	43056-1055	1
CAP-BREATHER (Ref # 43057)	43057-1001	1
RING,STOPPER (Ref # 43058)	43058-1100	1
CALIPER-SUB-ASSY,FR,BLACK (Ref # 43080)	43080-0153-DJ	1
PAD-ASSY-BRAKE (Ref # 43082)	43082-0169	1
BOOT,CALIPER (Ref # 49006)	49006-1088	1
BOOT,CALIPER (Ref # 49006A)	49006-1242	1
PIN,HANGER (Ref # 92043)	92043-0824	1
SEAL-OIL,PISTON (Ref # 92049)	92049-1331	2
SEAL,PISTON (Ref # 92093)	92093-1272	2
SPRING,PAD (Ref # 92145)	92145-1632	1
BOLT (Ref # 92153)	92153-1872	1
BOLT,SOCKET,8X30 (Ref # 92154)	92154-0844	5
BOLT,FLANGED,8X45 (Ref # 92154A)	92154-1706	2

© 2026 Kawasaki Motors Corp., U.S.A.