2027 Vulcan S

PARTS DIAGRAM

Brake Pedal/Torque Link

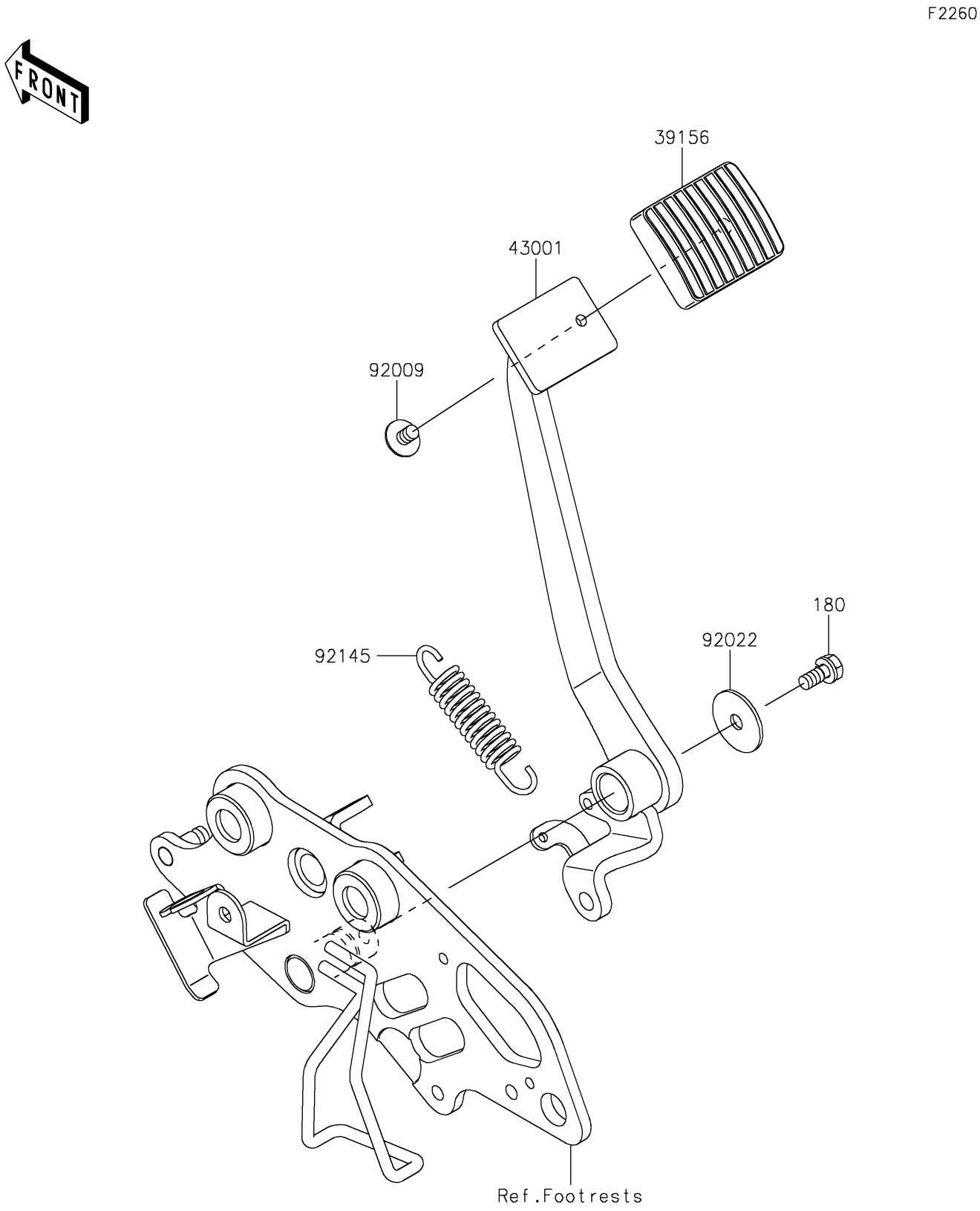

© 2026 Kawasaki Motors Corp., U.S.A.

2027 Vulcan S

PARTS LIST

Brake Pedal/Torque Link

ITEM NAME	PART NUMBER	QUANTITY
PAD (Ref # 39156)	39156-2695	1
LEVER-BRAKE,PEDAL (Ref # 43001)	43001-0733	1
SCREW,6X8 (Ref # 92009)	92009-1677	1
WASHER,7X28X1.6,BLACK (Ref # 92022)	92022-1392	1
SPRING,BRAKE PEDAL RETURN (Ref # 92145)	92145-1158	1
BOLT-UPSET-WS,6X14 (Ref # 180)	180BB0614	1

© 2026 Kawasaki Motors Corp., U.S.A.