2027 Vulcan S

PARTS DIAGRAM

Radiator

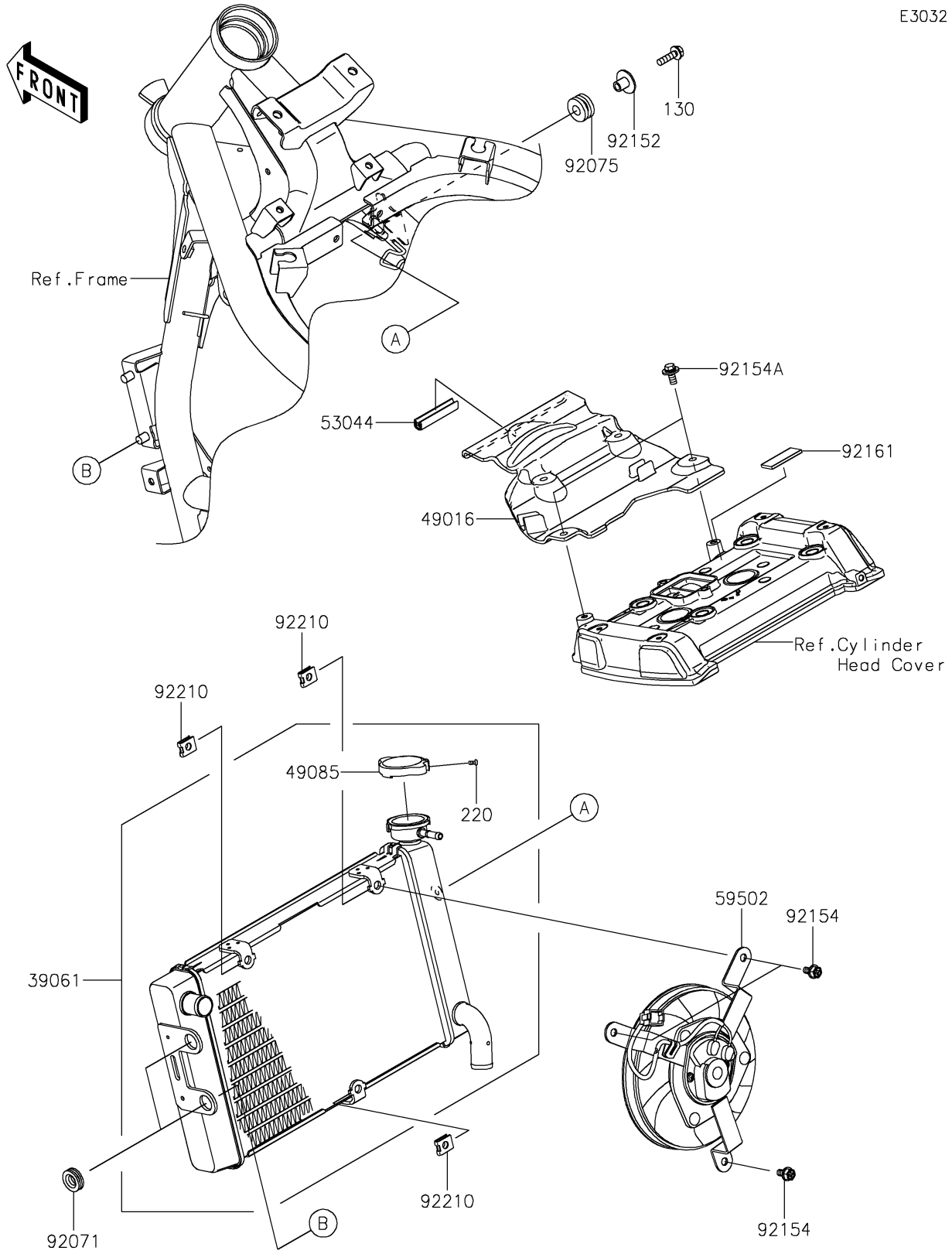

© 2026 Kawasaki Motors Corp., U.S.A.

2027 Vulcan S

PARTS LIST

Radiator

ITEM NAME	PART NUMBER	QUANTITY
RADIATOR-ASSY (Ref # 39061)	39061-0910	1
COVER-SEAL (Ref # 49016)	49016-0622	1
CAP-ASSY-PRESSURE (Ref # 49085)	49085-0016	1
TRIM,L=50 (Ref # 53044)	53044-1185	1
FAN-ASSY (Ref # 59502)	59502-0613	1
GROMMET (Ref # 92071)	92071-1115	2
DAMPER,10X24X12 (Ref # 92075)	92075-1690	1
COLLAR,6.5X10X13.1 (Ref # 92152)	92152-0910	1
BOLT (Ref # 92154)	92154-1429	3
BOLT,FLANGED-WP,6X14 (Ref # 92154A)	92154-1576	2
DAMPER (Ref # 92161)	92161-0301	1
NUT (Ref # 92210)	92210-1323	3
BOLT-FLANGED,6X22 (Ref # 130)	130BA0622	1
SCREW-PAN-CROS,3X6 (Ref # 220)	220AB0306	1

© 2026 Kawasaki Motors Corp., U.S.A.