2027 Vulcan S

PARTS DIAGRAM

Oil Pump/Oil Filter

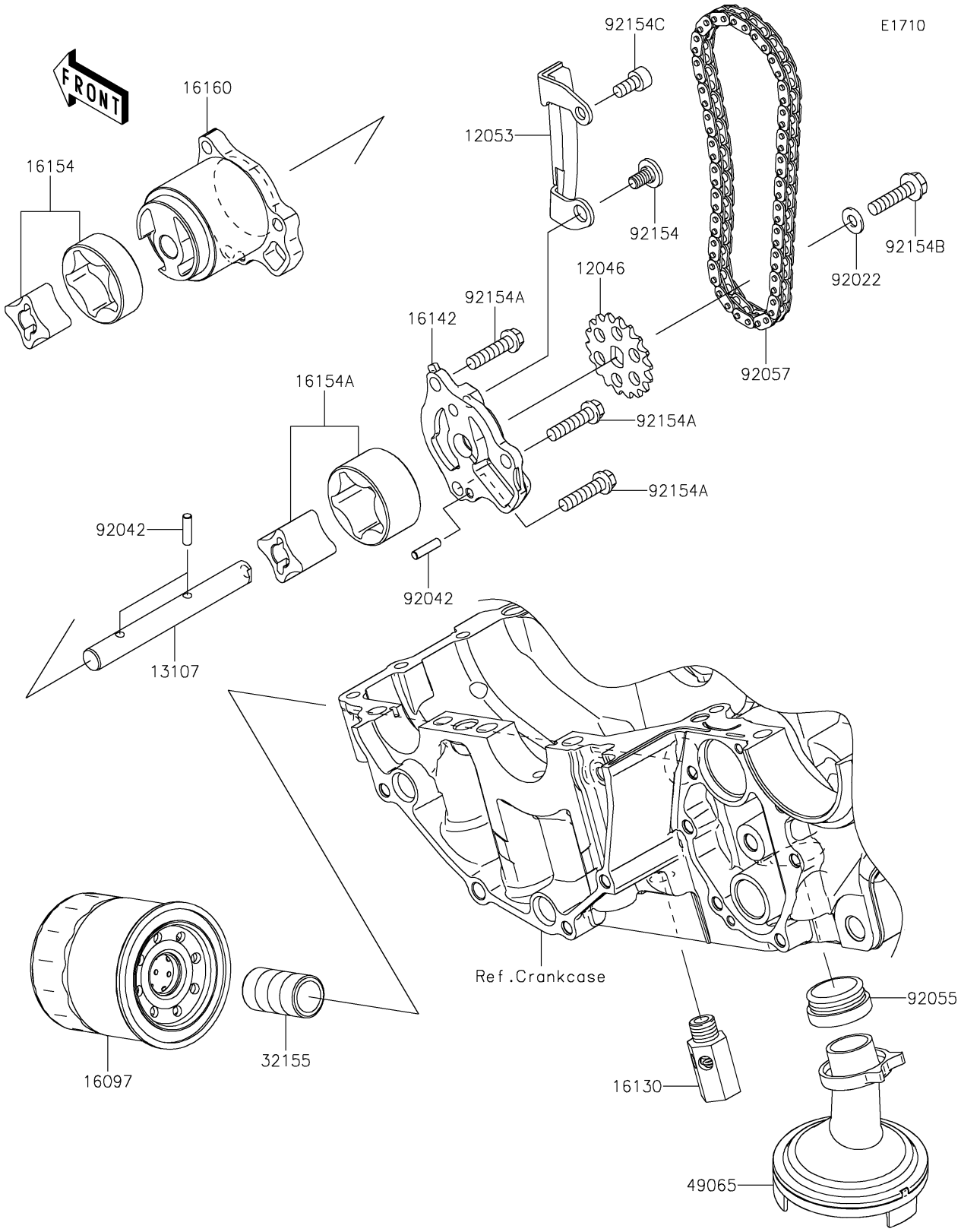

© 2026 Kawasaki Motors Corp., U.S.A.

2027 Vulcan S

PARTS LIST

Oil Pump/Oil Filter

Kawasaki
Let the Good Times Roll®

ITEM NAME	PART NUMBER	QUANTITY
SPROCKET,18T,BF04M (Ref # 12046)	12046-0040	1
GUIDE-CHAIN (Ref # 12053)	12053-0071	1
SHAFT,OIL PUMP (Ref # 13107)	13107-0772	1
FILTER-ASSY-OIL (Ref # 16097)	16097-0008	1
VALVE-ASSY-RELIEF (Ref # 16130)	16130-0552	1
COVER-PUMP (Ref # 16142)	16142-0712	1
ROTOR-PUMP,L=14 (Ref # 16154)	16154-0037	1
ROTOR-PUMP,40.56X22 (Ref # 16154A)	16154-1115	1
BODY (Ref # 16160)	16160-0110	1
PIPE,OIL FILTER (Ref # 32155)	32155-0029	1
FILTER-OIL (Ref # 49065)	49065-0708	1
WASHER,6X12.8X1.2 (Ref # 92022)	92022-1827	1
PIN,DOWEL,4X15.8 (Ref # 92042)	92042-014	3
RING-O,OIL FILTER (Ref # 92055)	92055-1354	1
CHAIN,DID 215FD-DHA,56LE (Ref # 92057)	92057-0098	1
BOLT,SOCKET,6X11 (Ref # 92154)	92154-0188	1
BOLT,FLANGED,6X25 (Ref # 92154A)	92154-0783	3
BOLT,FLANGED,6X25 (Ref # 92154B)	92154-0811	1
BOLT,SOCKET,6X12 (Ref # 92154C)	92154-0812	1

© 2026 Kawasaki Motors Corp., U.S.A.