2027 Vulcan S

PARTS DIAGRAM

Fuel Evaporative System(CA)

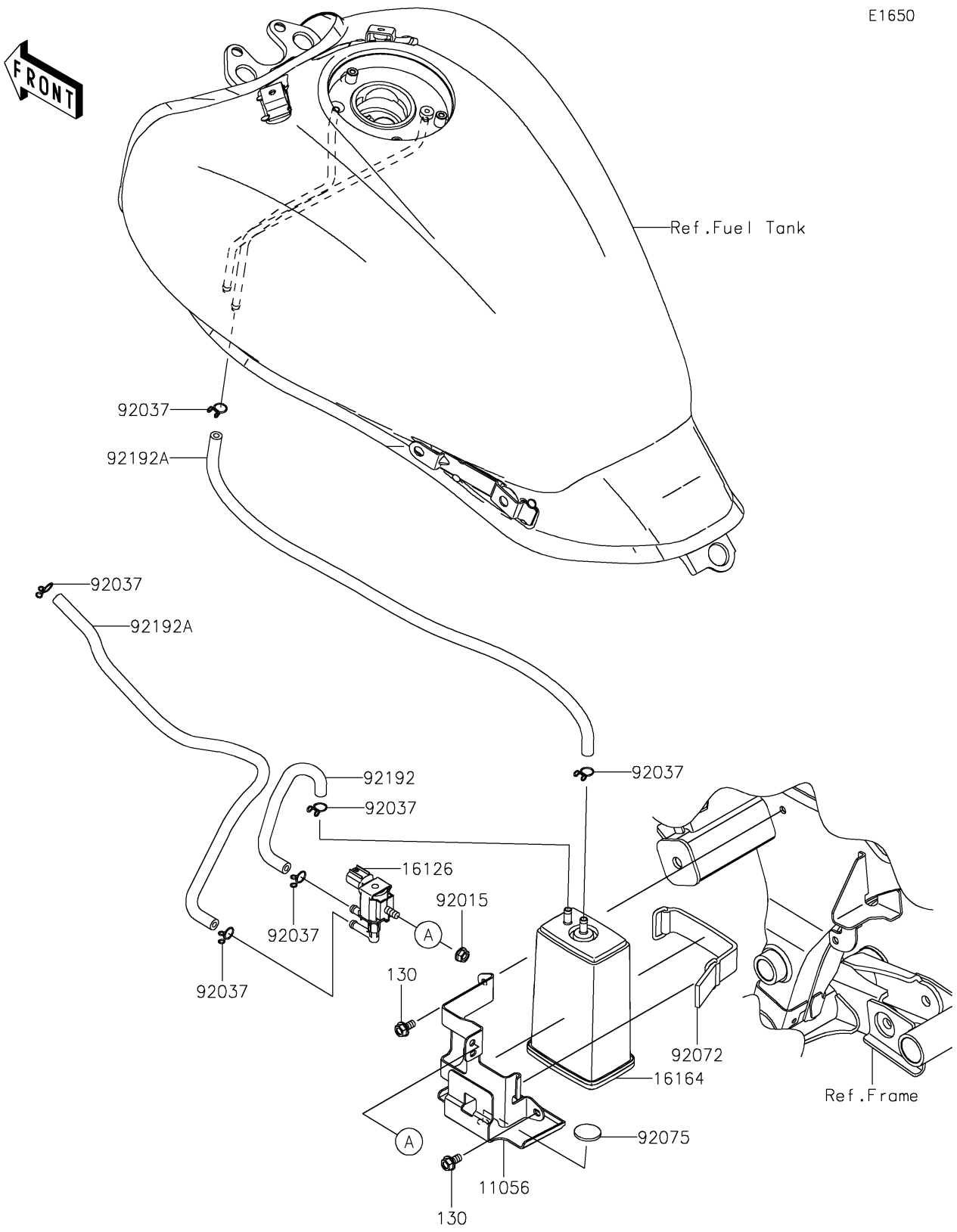

© 2026 Kawasaki Motors Corp., U.S.A.

2027 Vulcan S

PARTS LIST

Fuel Evaporative System(CA)

Kawasaki
Let the Good Times Roll®

ITEM NAME	PART NUMBER	QUANTITY
BRACKET (Ref # 11056)	11056-3991	1
VALVE,SOLENOID (Ref # 16126)	16126-0705	1
CANISTER (Ref # 16164)	16164-0012	1
NUT,FLANGED,6MM (Ref # 92015)	92015-1367	1
CLAMP,TUBE (Ref # 92037)	92037-147	6
BAND,L=90 (Ref # 92072)	92072-0135	1
DAMPER,RUBBER (Ref # 92075)	92075-261	1
TUBE,CANISTER-VALVE (Ref # 92192)	92192-1386	1
TUBE,5X10.4X470&40 (Ref # 92192A)	92192-2539	2
BOLT-FLANGED,6X12 (Ref # 130)	130BA0612	2

© 2026 Kawasaki Motors Corp., U.S.A.