2027 Vulcan S

PARTS DIAGRAM

Fuel Injection

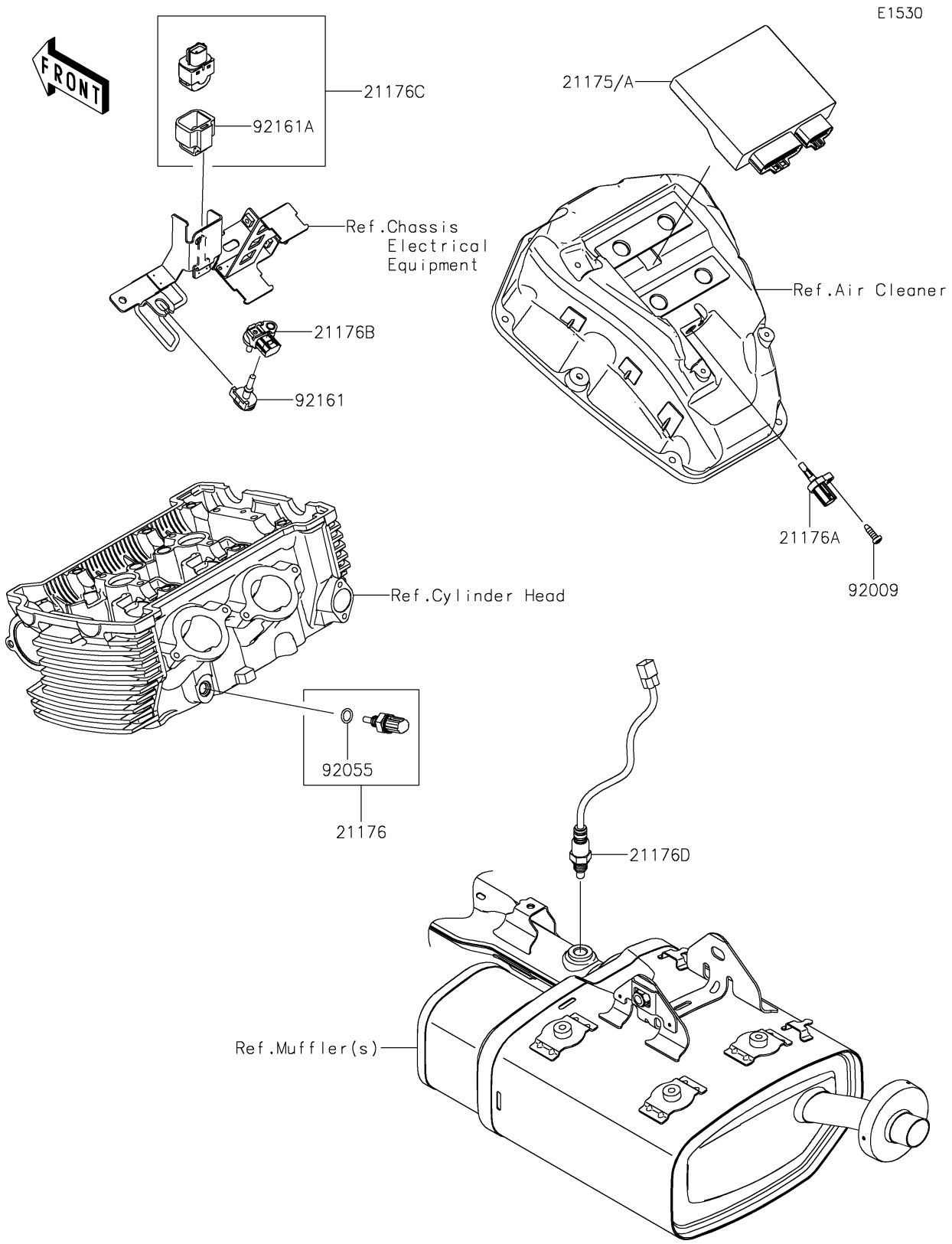

© 2026 Kawasaki Motors Corp., U.S.A.

2027 Vulcan S

PARTS LIST

Fuel Injection

ITEM NAME	PART NUMBER	QUANTITY
CONTROL UNIT-ELECTRONIC (Ref # 21175)	21175-1196	1
CONTROL UNIT-ELECTRONIC (Ref # 21175A)	21175-1197	1
SENSOR,WATER TEMP (Ref # 21176)	21176-0009	1
SENSOR,AIR TEMPERATURE (Ref # 21176A)	21176-0048	1
SENSOR,PRESSURE (Ref # 21176B)	21176-0111	1
SENSOR,VEHICLE-DOWN (Ref # 21176C)	21176-0704	1
SENSOR,OXYGEN (Ref # 21176D)	21176-0775	1
SCREW,TAPPING,5X16 (Ref # 92009)	92009-1984	1
RING-O,9.5X1.9 (Ref # 92055)	92055-0016	1
DAMPER (Ref # 92161)	92161-0673	1
DAMPER (Ref # 92161A)	92161-0951	1

© 2026 Kawasaki Motors Corp., U.S.A.