2027 Vulcan S

PARTS DIAGRAM

Throttle

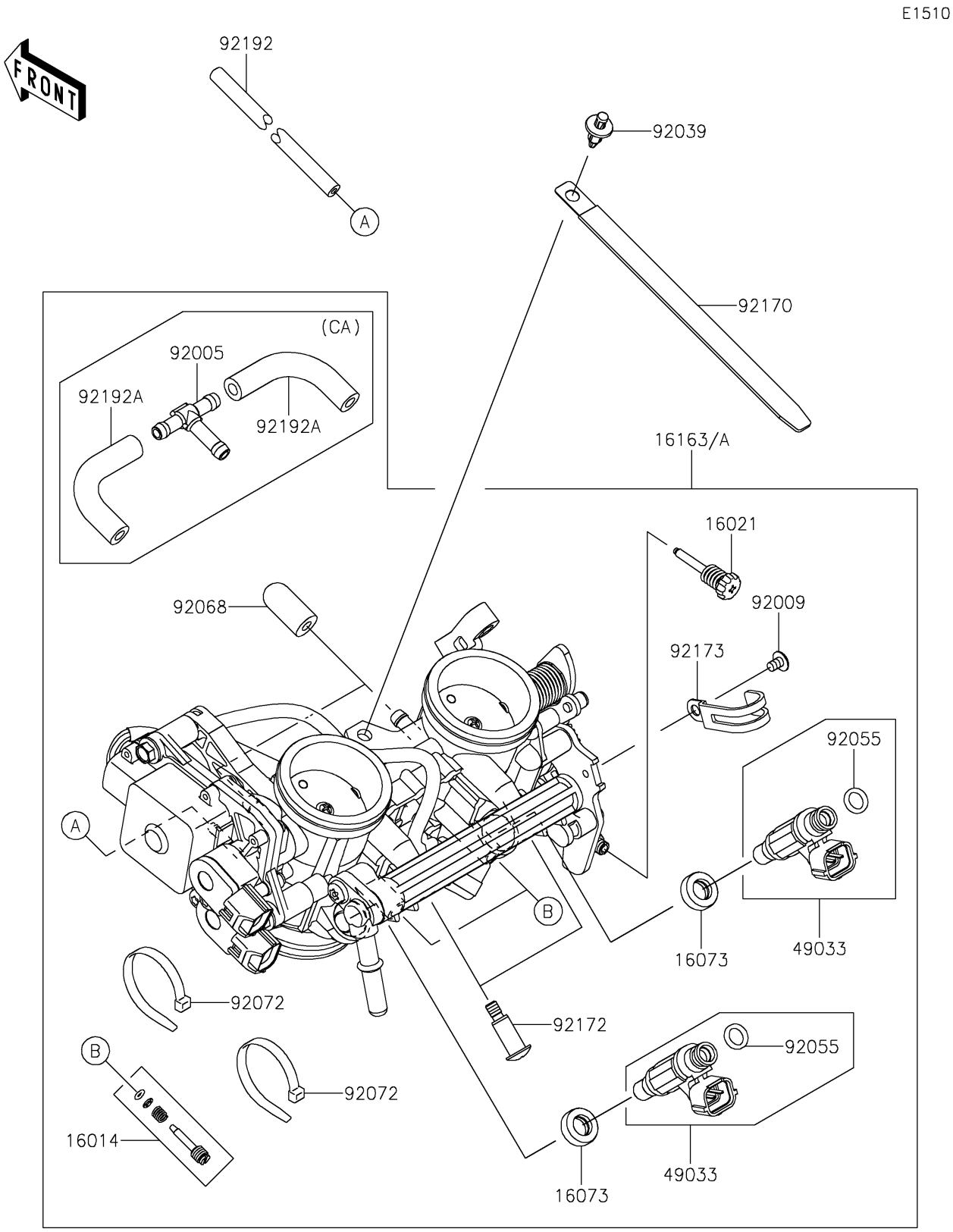

© 2026 Kawasaki Motors Corp., U.S.A.

2027 Vulcan S

PARTS LIST

Throttle

ITEM NAME	PART NUMBER	QUANTITY
SCREW-PILOT AIR (Ref # 16014)	16014-0002	2
SCREW-THROTTLE STOP (Ref # 16021)	16021-0033	1
INSULATOR (Ref # 16073)	16073-3707	2
THROTTLE-ASSY (Ref # 16163)	16163-0827	1
THROTTLE-ASSY (Ref # 16163A)	16163-0838	1
NOZZLE-INJECTION (Ref # 49033)	49033-0011	2
FITTING,3WAY (Ref # 92005)	92005-0730	1
SCREW,CLAMP (Ref # 92009)	92009-1860	1
RIVET (Ref # 92039)	92039-0068	1
RING-O,INJECTION NOZZLE (Ref # 92055)	92055-1622	2
PLUG,12X25 (Ref # 92068)	92068-006	2
BAND,SUB-HARNESS (Ref # 92072)	92072-0012	2
CLAMP,L=150 (Ref # 92170)	92170-1114	1
SCREW,PIPE INJECTION (Ref # 92172)	92172-0064	2
CLAMP (Ref # 92173)	92173-0288	1
TUBE,3X6.7X300 (Ref # 92192)	92192-0977	1
TUBE (Ref # 92192A)	92192-1045	2

© 2026 Kawasaki Motors Corp., U.S.A.