# 2027 Vulcan S

## PARTS DIAGRAM

### Crankcase Bolt Pattern

E1412

(Upper Case)

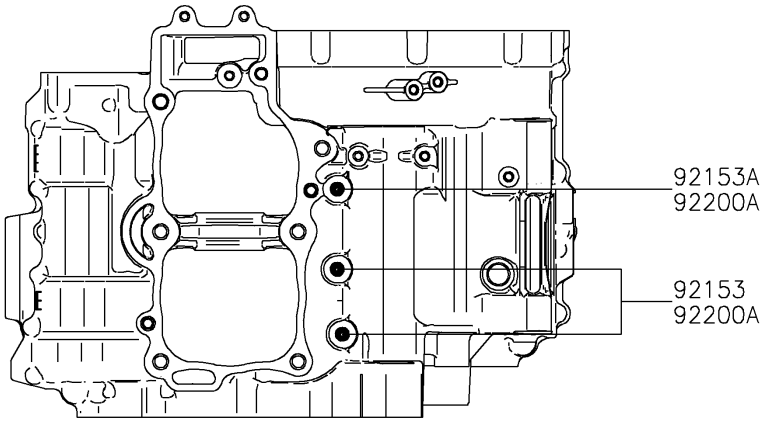


(Lower Case)

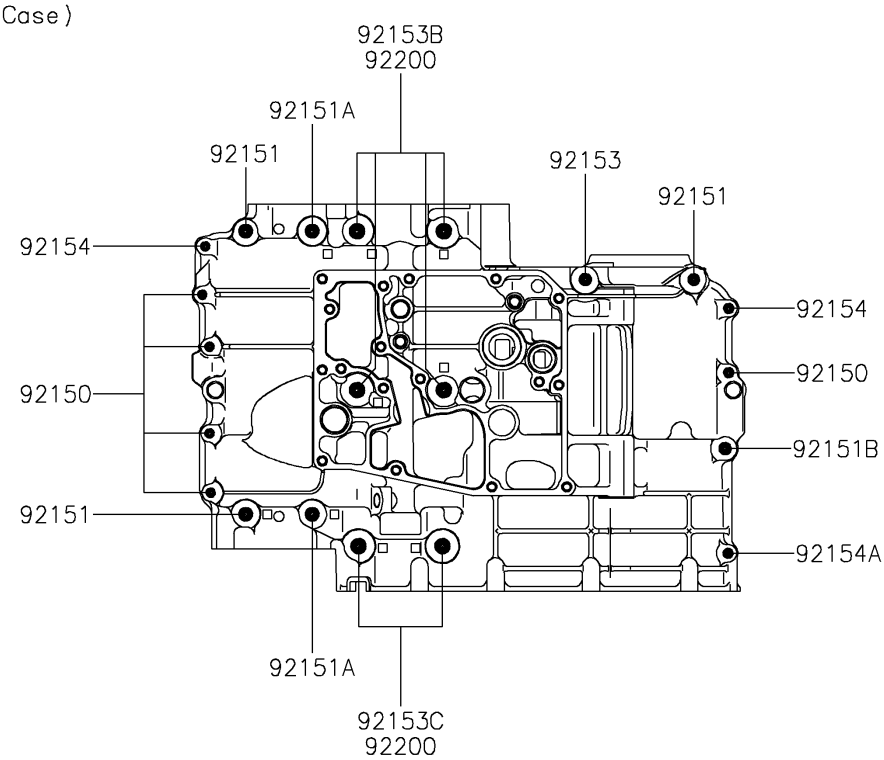


© 2026 Kawasaki Motors Corp., U.S.A.

# 2027 Vulcan S

## PARTS LIST

### Crankcase Bolt Pattern

| ITEM NAME | PART NUMBER | QUANTITY |
|---|---|---|
| BOLT,6X38 (Ref # 92150) | 92150-1301 | 5 |
| BOLT,8X60 (Ref # 92151) | 92151-1461 | 3 |
| BOLT,8X73 (Ref # 92151A) | 92151-1462 | 2 |
| BOLT,8X50 (Ref # 92151B) | 92151-1463 | 1 |
| BOLT,FLANGED,8X110 (Ref # 92153) | 92153-0959 | 3 |
| BOLT,FLANGED,8X120 (Ref # 92153A) | 92153-0960 | 1 |
| BOLT,FLANGED,9X113 (Ref # 92153B) | 92153-1449 | 4 |
| BOLT,FLANGED,9X83 (Ref # 92153C) | 92153-1450 | 2 |
| BOLT,FLANGED,6X45 (Ref # 92154) | 92154-0966 | 2 |
| BOLT,FLANGED,6X32 (Ref # 92154A) | 92154-0967 | 1 |
| WASHER,9.2X19X2.3 (Ref # 92200) | 92200-0115 | 6 |
| WASHER,8.5X16X1.2 (Ref # 92200A) | 92200-1063 | 3 |

© 2026 Kawasaki Motors Corp., U.S.A.