2027 Vulcan S

PARTS DIAGRAM

Gear Change Drum/Shift Fork(s)

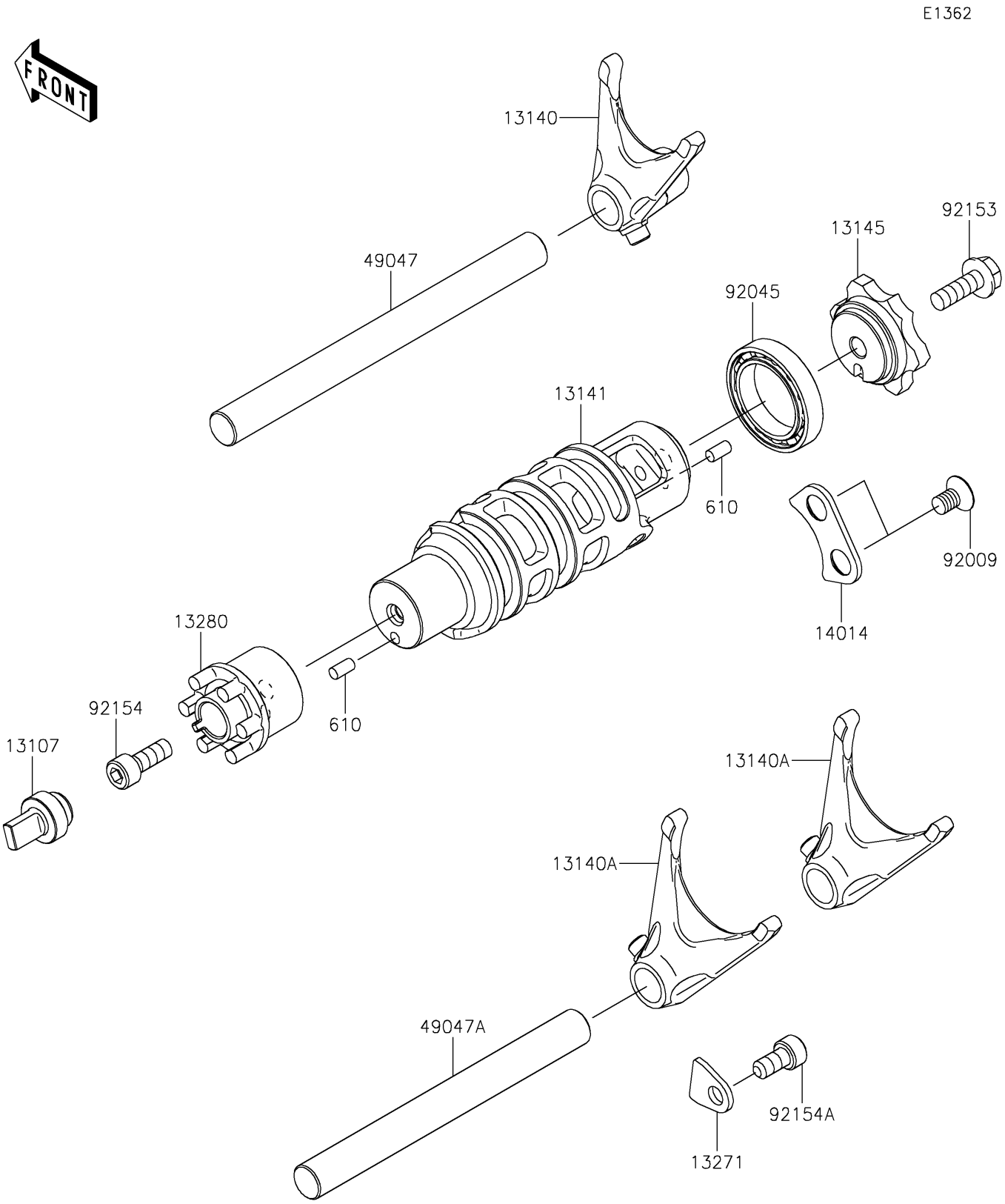

© 2026 Kawasaki Motors Corp., U.S.A.

2027 Vulcan S

PARTS LIST

Gear Change Drum/Shift Fork(s)

Kawasaki
Let the Good Times Roll®

ITEM NAME	PART NUMBER	QUANTITY
SHAFT (Ref # 13107)	13107-0843	1
FORK-SHIFT,INPUT (Ref # 13140)	13140-0025	1
FORK-SHIFT,OUTPUT (Ref # 13140A)	13140-0026	2
DRUM-CHANGE (Ref # 13141)	13141-0584	1
CAM-CHANGE DRUM (Ref # 13145)	13145-0020	1
PLATE (Ref # 13271)	13271-0626	1
HOLDER (Ref # 13280)	13280-0875	1
PLATE-POSITION (Ref # 14014)	14014-0018	1
ROD-SHIFT,INPUT (Ref # 49047)	49047-0029	1
ROD-SHIFT,OUTPUT (Ref # 49047A)	49047-0030	1
SCREW,6X10 (Ref # 92009)	92009-1375	2
BEARING-BALL,6805 (Ref # 92045)	92045-1122	1
BOLT,FLANGED,6X18 (Ref # 92153)	92153-0958	1
BOLT,SOCKET,6X16 (Ref # 92154)	92154-0484	1
BOLT,SOCKET,6X12 (Ref # 92154A)	92154-0812	1
ROLLER,4X8 (Ref # 610)	610A0408	2

© 2026 Kawasaki Motors Corp., U.S.A.