2027 Vulcan S

PARTS DIAGRAM

Transmission

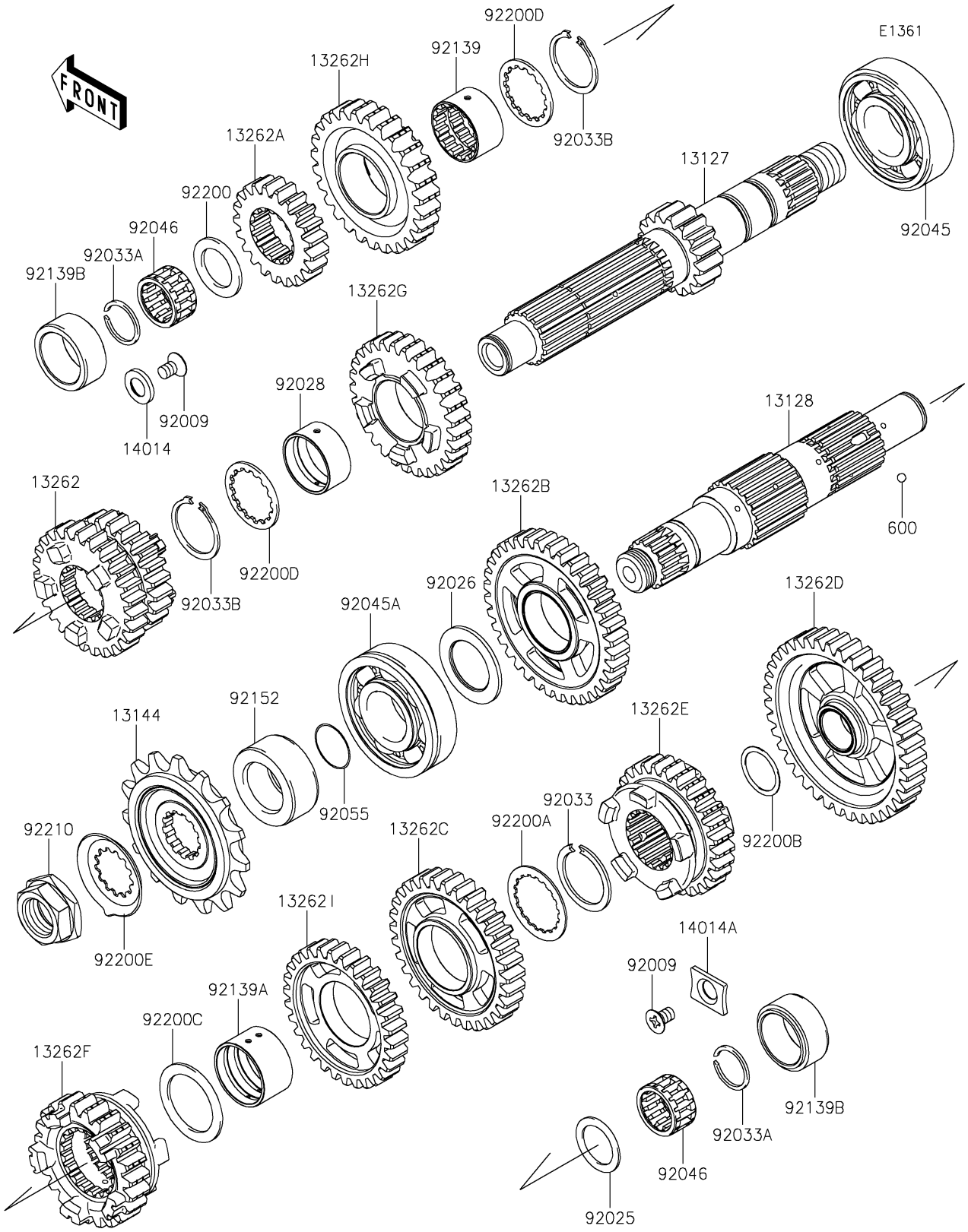

© 2026 Kawasaki Motors Corp., U.S.A.

2027 Vulcan S

PARTS LIST

Transmission

ITEM NAME	PART NUMBER	QUANTITY
SHAFT-TRANSMISSION INPUT,16T (Ref # 13127)	13127-0666	1
SHAFT-TRANSMISSION OUTPUT (Ref # 13128)	13128-0690	1
SPROCKET-OUTPUT,15T,#520 (Ref # 13144)	13144-0576	1
GEAR,INPUT 3RD&4TH,24T&27T (Ref # 13262)	13262-0819	1
GEAR,INPUT 2ND,21T (Ref # 13262A)	13262-0821	1
GEAR,OUTPUT 2ND,36T (Ref # 13262B)	13262-0826	1
GEAR,OUTPUT 3RD,32T (Ref # 13262C)	13262-0827	1
GEAR,OUTPUT LOW,39T (Ref # 13262D)	13262-0828	1
GEAR,OUTPUT 5TH,28T (Ref # 13262E)	13262-1229	1
GEAR,OUTPUT 6TH,23T (Ref # 13262F)	13262-1230	1
GEAR,INPUT 5TH,29T (Ref # 13262G)	13262-1275	1
GEAR,INPUT 6TH,27T (Ref # 13262H)	13262-1276	1
GEAR,OUTPUT 4TH,30T (Ref # 13262I)	13262-1580	1
PLATE-POSITION,9.5X17X2.3 (Ref # 14014)	14014-0019	1
PLATE-POSITION,RH (Ref # 14014A)	14014-0020	1
SCREW,6X10 (Ref # 92009)	92009-1375	2
SHIM,20.3X28X1.1 (Ref # 92025)	92025-1455	1
SPACER,25.3X39X2.0 (Ref # 92026)	92026-0715	1
BUSHING,INPUT GEAR (Ref # 92028)	92028-1449	1
RING-SNAP,26.9X34X1.5 (Ref # 92033)	92033-0047	1
RING-SNAP,20MM (Ref # 92033A)	92033-015	2
RING-SNAP,25.9X30.6X1.2 (Ref # 92033B)	92033-1037	2
BEARING-BALL,25X62X17 (Ref # 92045)	92045-0042	1
BEARING-BALL,6305N2SH2 (Ref # 92045A)	92045-1224	1
BEARING-NEEDLE,KMJ20X26X13.8X1 (Ref # 92046)	92046-1185	2
RING-O,21.5X1.5 (Ref # 92055)	92055-0196	1
BUSHING,25X28.3X16.7 (Ref # 92139)	92139-0107	1
BUSHING,OUT 3RD&4TH GEAR (Ref # 92139A)	92139-0108	1
BUSHING,26X34X16.2 (Ref # 92139B)	92139-0713	2

© 2026 Kawasaki Motors Corp., U.S.A.

2027 Vulcan S

PARTS LIST

Transmission

ITEM NAME	PART NUMBER	QUANTITY
COLLAR,25X40X17.2 (Ref # 92152)	92152-0972	1
WASHER,20.2X30X1.8 (Ref # 92200)	92200-0221	1
WASHER,30.3X38X1.0 (Ref # 92200A)	92200-0222	1
WASHER,20.2X25.0X0.5 (Ref # 92200B)	92200-0291	1
WASHER,29.9X40X1.5 (Ref # 92200C)	92200-0721	1
WASHER,28.5X34.0X1.5 (Ref # 92200D)	92200-1240	2
WASHER (Ref # 92200E)	92200-1932	1
NUT,20MM (Ref # 92210)	92210-0850	1
BALL-STEEL,5/32 (Ref # 600)	600A0500	3

© 2026 Kawasaki Motors Corp., U.S.A.