2027 Vulcan S

PARTS DIAGRAM

Cylinder/Piston(s)

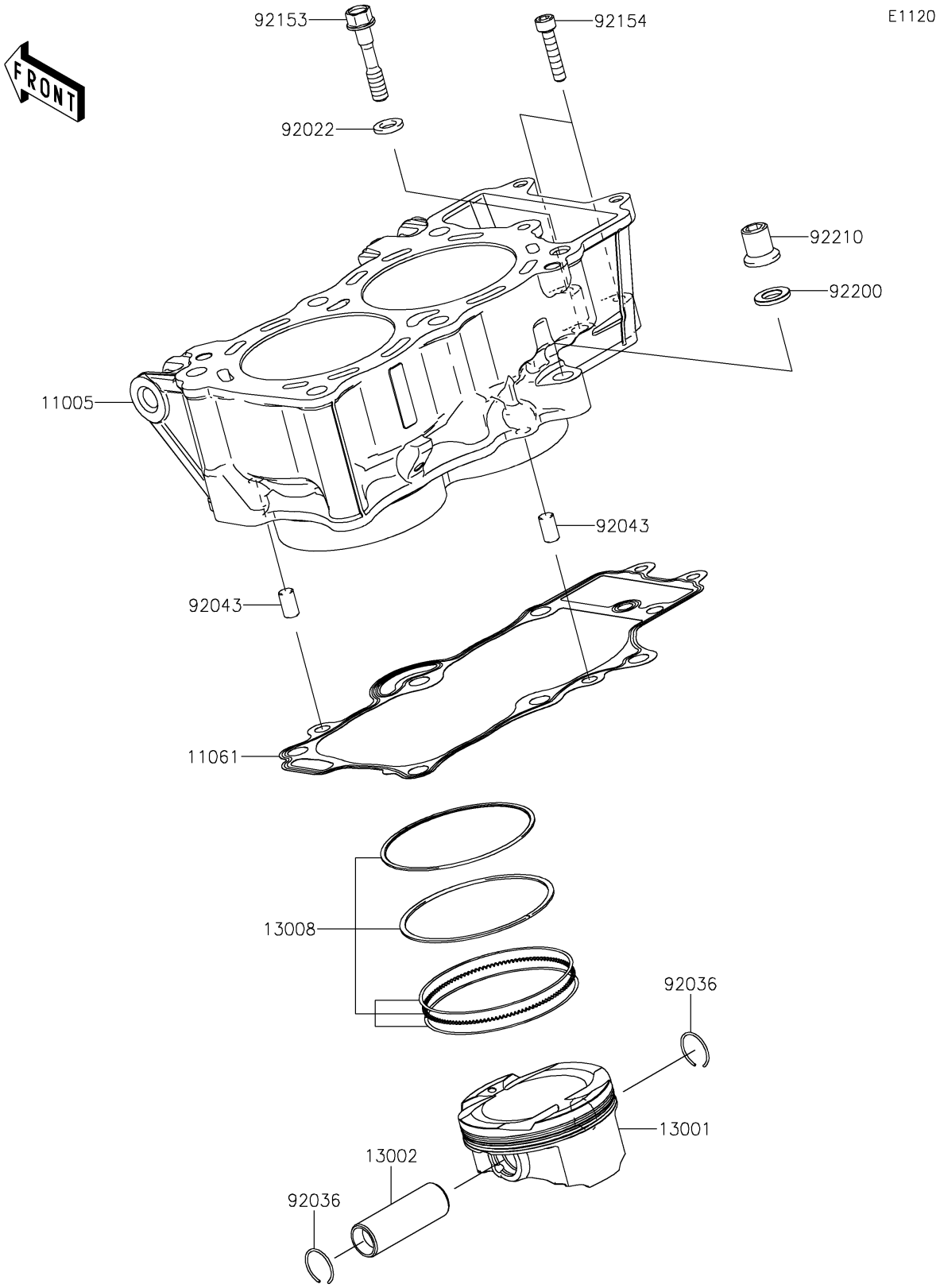

© 2026 Kawasaki Motors Corp., U.S.A.

2027 Vulcan S

PARTS LIST

Cylinder/Piston(s)

ITEM NAME	PART NUMBER	QUANTITY
CYLINDER-ENGINE (Ref # 11005)	11005-0580	1
GASKET,CYLINDER BASE (Ref # 11061)	11061-0171	1
PISTON-ENGINE (Ref # 13001)	13001-0760	2
PIN-PISTON (Ref # 13002)	13002-0007	2
RING-SET-PISTON (Ref # 13008)	13008-1196	2
WASHER,9X15.5X2 (Ref # 92022)	92022-1401	1
RING-SNAP,PISTON PIN (Ref # 92036)	92036-008	4
PIN,8X14 (Ref # 92043)	92043-1567	2
BOLT,8X43 (Ref # 92153)	92153-1011	1
BOLT,SOCKET,6X30 (Ref # 92154)	92154-0116	2
WASHER,10.5X19X2.3 (Ref # 92200)	92200-0363	1
NUT (Ref # 92210)	92210-0223	1

© 2026 Kawasaki Motors Corp., U.S.A.