2027 Vulcan S

PARTS DIAGRAM

Cylinder Head Cover

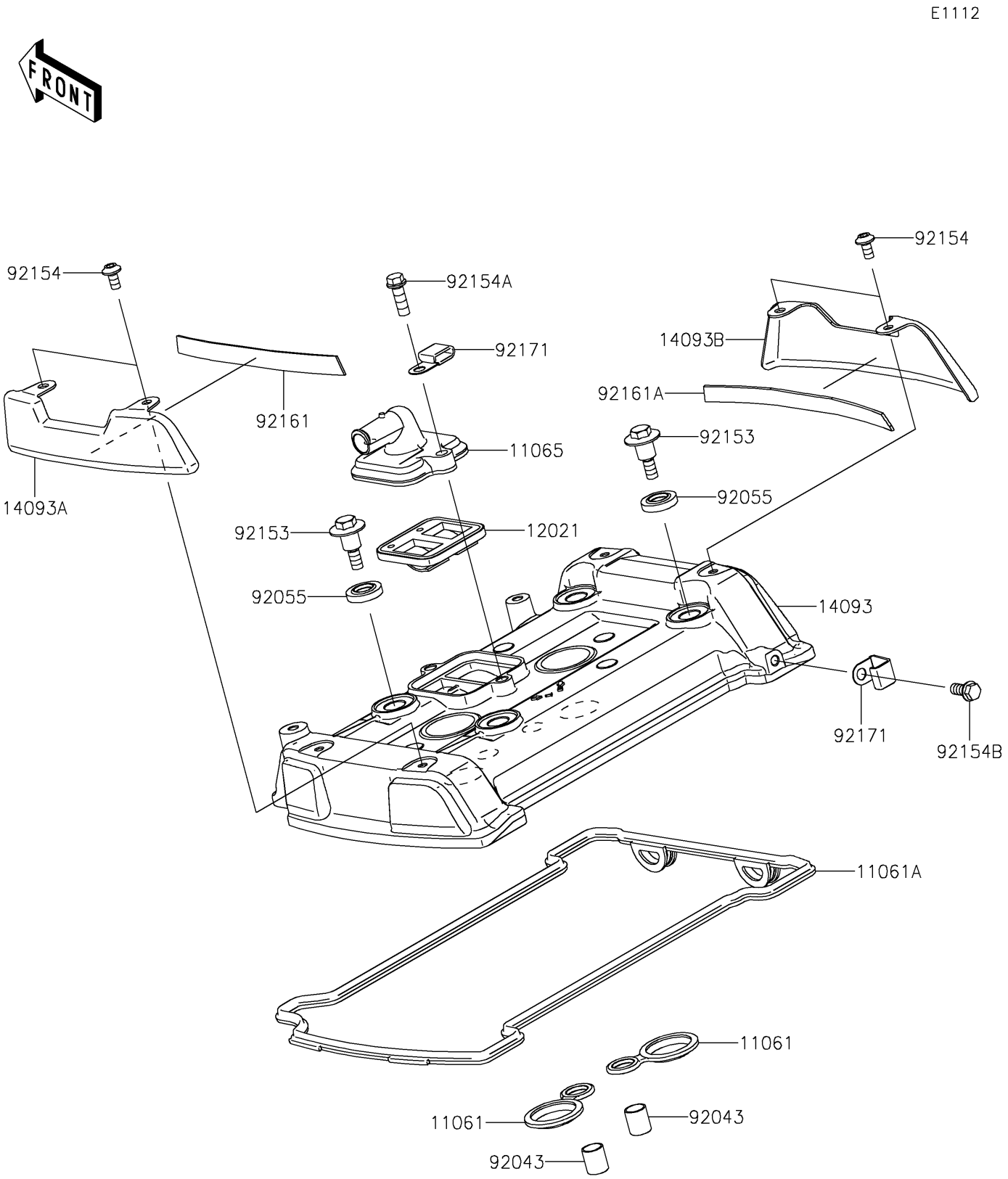

© 2026 Kawasaki Motors Corp., U.S.A.

2027 Vulcan S

PARTS LIST

Cylinder Head Cover

ITEM NAME	PART NUMBER	QUANTITY
GASKET,SPARK PLUG HOLE (Ref # 11061)	11061-0105	2
GASKET,HEAD COVER (Ref # 11061A)	11061-0926	1
CAP (Ref # 11065)	11065-1320	1
VALVE-ASSY-REED (Ref # 12021)	12021-0716	1
COVER,HEAD (Ref # 14093)	14093-0053	1
COVER,DRESS,LH (Ref # 14093A)	14093-0361	1
COVER,DRESS,RH (Ref # 14093B)	14093-0362	1
PIN,10.1X12X14 (Ref # 92043)	92043-4009	2
RING-O,HEAD COVER BOLT (Ref # 92055)	92055-0195	4
BOLT,HEAD COVER (Ref # 92153)	92153-0793	4
BOLT,SOCKET,5X10 (Ref # 92154)	92154-1691	4
BOLT,FLANGED,6X18 (Ref # 92154A)	92154-1775	2
BOLT,FLANGED,6X12 (Ref # 92154B)	92154-1776	1
DAMPER,DRESS COVER,LH (Ref # 92161)	92161-1765	1
DAMPER,DRESS COVER,RH (Ref # 92161A)	92161-1766	1
CLAMP (Ref # 92171)	92171-0813	2

© 2026 Kawasaki Motors Corp., U.S.A.