# 2027 Vulcan S

## PARTS DIAGRAM

### Cylinder Head

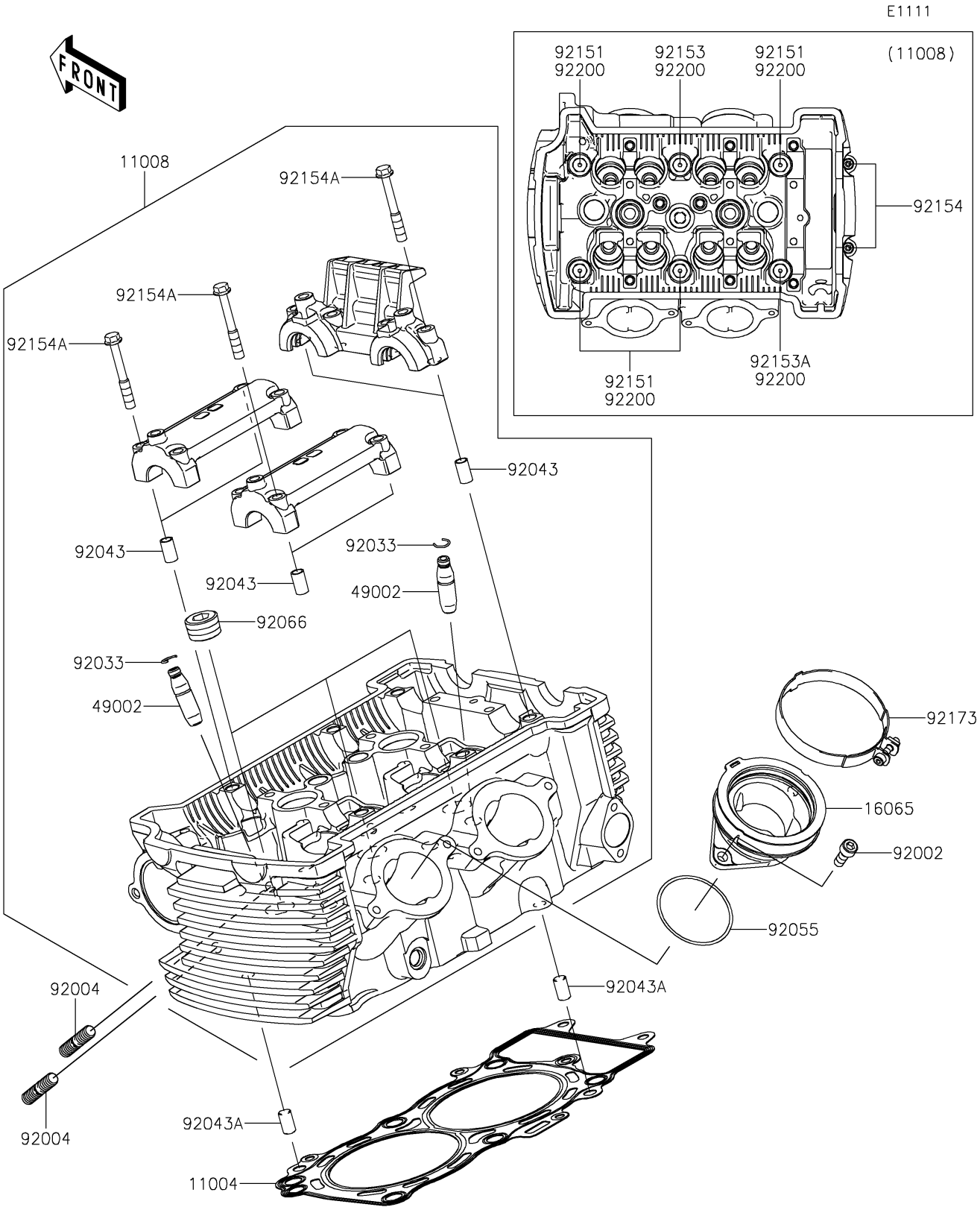


© 2026 Kawasaki Motors Corp., U.S.A.

# 2027 Vulcan S

## PARTS LIST

### Cylinder Head

| ITEM NAME | PART NUMBER | QUANTITY |
|---|---|---|
| GASKET-HEAD (Ref # 11004) | 11004-0064 | 1 |
| HEAD-COMP-CYLINDER (Ref # 11008) | 11008-0992 | 1 |
| HOLDER-CARBURETOR (Ref # 16065) | 16065-0128 | 2 |
| GUIDE-VALVE (Ref # 49002) | 49002-1116 | 8 |
| BOLT,6X16 (Ref # 92002) | 92002-1143 | 4 |
| STUD,8X22 (Ref # 92004) | 92004-0025 | 4 |
| RING-SNAP (Ref # 92033) | 92033-1247 | 8 |
| PIN,6.2X8X14 (Ref # 92043) | 92043-1263 | 6 |
| PIN,8X14 (Ref # 92043A) | 92043-1567 | 2 |
| RING-O,47X1.9 (Ref # 92055) | 92055-1600 | 2 |
| PLUG,PT1/2X12.5 (Ref # 92066) | 92066-0002 | 3 |
| BOLT,10X158 (Ref # 92151) | 92151-1152 | 4 |
| BOLT,FLANGED-SMALL,10X176 (Ref # 92153) | 92153-0972 | 1 |
| BOLT,FLANGED-SMALL,10X80 (Ref # 92153A) | 92153-1321 | 1 |
| BOLT,SOCKET,6X30 (Ref # 92154) | 92154-0116 | 2 |
| BOLT,FLANGED,6X45 (Ref # 92154A) | 92154-3737 | 12 |
| CLAMP (Ref # 92173) | 92173-0239 | 2 |
| WASHER,10.5X19X2.3 (Ref # 92200) | 92200-0363 | 6 |

© 2026 Kawasaki Motors Corp., U.S.A.